Application technology – 2nd edition

Volume II: Plastic piping systems, pre-wall and drainage technology.

viega

Application technology – 2nd edition

Volume II: Plastic piping systems – Pre-wall and drainage technology.

viega

Imprint

Application technology Vol. II
Plastic piping systems – Pre-wall and drainage technology
2nd edition 2017
INT 644086

© Viega GmbH & Co. KG, Attendorn
All rights, also those of reproduction, are reserved.

Publisher
Viega GmbH & Co. KG
Sanitär- und Heizungssysteme
Postfach 430/440
57428 Attendorn
Germany

National address
Viega Platz 1
57439 Attendorn
Germany

Phone +49 2722 61-0
Telefax +49 2722 61-1415
viega.de

Technical Consulting
Phone +49 2722 61-1100
Telefax +49 2722 61-1101
service-technik@viega.de

The contents of this book is non-binding. We reserve the right to make changes which benefit the latest findings and technical progress.

About this translated version

This instruction for use contains important information about the choice of product or system, assembly and commissioning as well as intended use and, if required, maintenance measures. The information about the products, their properties and application technology are based on the current standards in Europe (e. g. EN) and/or in Germany (e. g. DIN/DVGW).

Some passages in the text may refer to technical codes in Europe/Germany. These should serve as recommendations in the absence of corresponding national regulations. The pertinent national laws, standards, regulations and guidelines, as well as other technical guidelines, have priority over German/European guidelines in this manual: The information is not binding for other countries and territories and should, as mentioned, be considered as support.

PLASTIC PIPING SYSTEMS 1

PRE-WALL TECHNOLOGY 2

DRAINAGE TECHNOLOGY 3

CONTENTS

About this translated version

Foreword

PLASTIC PIPING SYSTEMS

Fundamentals

Potable water as a foodstuff 17

Regulations and standards 17

Water quality and microbiology 18

Maintaining the potable water quality 19

Materials 21

Dimensioning of potable water systems 22
- Pressure losses 22
- Pipe friction pressure losses 22
- Individual resistances 23
- Planning criteria 24
- Types of pipes – selection 24

Pipe routing – types of connection 25
- Series pipeline installation 25
- Ring system installation 26
- T-piece installation 26

Length Expansion – compensation 27
- Assembly rules 27
- Heat expansion 28
- Calculation example – expansion bend length 28

Insulation of the pipelines 29
- Heat insulation 29
  - Hot potable water – PWH 29
  - Cold potable water – PWC – in accordance with EN 806-2 29
- Soundproofing insulation 31
  - Installation technical characteristics 31

Viega Smartpress press connector system

System description 32
Technical data 33

Application technology 34
Laying and fixing pipes 34
Press connectors 35
Zeta values 35
SC-Contur 37
Marking 37
Compatibility of connectors/pipes 38
Storage and transport 40
Corrosion protection 40
Assembly 41
Required tools 41
Bending pipes 42
Shortening the pipes 43
Stripping the pipes 43
Establishing press connections 44
Press connections – space requirements and distances 45
Radiator connection – mounting examples 46
Out of the wall with radiator connection block mod. 6797.6 46
Out of the wall with radiator connection block mod. 6797.7 47
Out of the floor with screw fittings 48
Out of the floor with radiator connection block mod. 6775.31 49
Connection by manifold 50
Out of the wall with radiator connection elbows mod. 6777 51

PRE-WALL TECHNOLOGY

Fundamentals

Bathroom planning 55
- Space requirement 55
- Accessibility 55
- Planning of barrier-free sanitary rooms 55
  - Planning criteria – sanitary objects 56
  - Movement areas according to DIN 18040-2 58
  - Load requirements for sanitary objects 58
  - Sample installation – barrier-free WC 59
- Electrical equipment installations 60
  - Potential equalisation 60
  - Protected zones 60
- Pre-wall installation vs. wall slot 61

System descriptions

Steptec 62
- Steptec punch 63
- Modules 63
- Steptec connectors for mounting rails 64
- Obtego cladding panel 66
- Calculation of required material quantities 67
- Assembly 68
  - Installation dimensions – half-height pre-wall 70
  - Installation dimensions – half-height partition 71
  - Installation dimensions – room-height partition 72
  - Installation dimensions – half-height partition 74
  - Installation dimensions – room-height partition 75
  - Assembly times 76

Viega Eco / Eco Plus 77
- Elements 80
- Mounting 81
- Viega Eco Plus corner elements 82
- WC element will 4.5 litres full-flush volume 84
- Installation dimensions – construction heights/installation depths 85
- Viega Eco Plus shower WC element universal 86
- Viega Eco Plus WC element height-adjustable 88
- Viega Eco Plus WB element individually height-adjustable 90
- Viega concealed connection box 92

Hygiene flushing function – installation variants 97
PWH/PWC with flushing station 97
PWC with Visign for Care flush plate 98

Viega Mono 99
WC/bidet block 99
Assembly 100

Viega concealed cistern 1F – installation depth 80 mm 101
System description 101
Technical data 102
Setting flush volumes 103

WC flushing systems 104
Concealed cistern 2 104

Viega flushing throttle 105
WC element – Villeroy & Boch »Green Gain« 107
WC element – odour extraction 108
WC element – individual seat height adjustment 109

Flushing systems 110
Flush-stop technology 110
Dual flush technology 110

WC actuation 111
Flush plates 111
Compatibility 111
Viega flush plate configurator 112
Overview of the equipment features 114
Visign for Public 5/6 – infrared technology 119
System description 119
Functions 120
Assembly 121
Electronic WC flush actuation 122
System description 122
Usage examples 124
Tablet holder for WC cleaning tabs 129
Tile-level installation 130
Types of actuation 132
Touchless electronic actuation 132
Electrical system 132

Urinal actuation 133
Overview – equipment sets 133
Overview of the equipment features 135
Siphon sensor technology 136
Types of actuation for public areas 137

Application technology

Fire protection in domestic technology 138
Planning criteria 138
Zero distance – definition 139
Piping isolation 141
Profipress 141
Viega Smartpress / Sanfix Fosta 141
Sanpress 141
Prestabo 141
Megapress 141
Pipe shells and mats for fire protection constructions 142

Floor lead-in

Profipress/Profipress with Smartloop Inliner circulation 143
Sanpress/Sanpress Inox/Sanpress Inox with Smartloop Inliner circulation 144
Prestabo/Prestabo PP coated 145
Megapress 146
One-side insulation 147
Viega Smartpress / Sanfix Fosta 150
Zero distances – in the Viega system 151

Sound protection in domestic technology 155
Acoustic assessment of the layout 155
Fundamental installation rules 158
Acoustic proof of suitability 158
Sound protection certificates for Viega pre-wall systems 159
Steptec at solid wall 159
Viega Eco Plus at solid wall 160
Viega Mono at solid wall 160
Steptec installation wall 161
Viega Eco Plus at lightweight construction wall Knauf W116 161
Steptec at lightweight construction wall Knauf W112 162
Viega Eco Plus at lightweight construction wall 163

Dry construction – processing instructions 164
Gypsum plaster boards 164
IFGP cladding panels 164
Aqua-CS cladding panels 166
Waterproofing 166

DRAINAGE TECHNOLOGY

Fundamentals

Intended use 171

Regulations and standards 172

Requirements for drains 172
Odour traps – water seal levels 173
Pipe interrupters 174
Load-bearing capacity 175
Drainage capacity 176
Temperature resistance – material properties 181
Maintenance and inspection 181

Sound protection 182

Waterproofing 184
Conventional sealing 185
Bonded sealing 187
Planning 187
System description 188
Components 188
Reliable bonded sealing – overview 189
Viega drains 190

Drains and overflows for bathtubs

Fittings with inlet – overview 192
Multiplex Trio Visign MT3/MT5 196
Multiplex Trio Visign MT9 198
Multiplex Trio F 200
Multiplex Trio F/Rotaplex Trio F Visign – valve cone drive 202
Multiplex Trio /Rotaplex Trio Visign MT5 – valve cone drive 203
Rotaplex Trio Visign RT5/RT3 204
Rotaplex Trio F 206
Multiplex Trio E3, E2, E – electronic mixing unit 208
System description 208

Intended use 208
Components 209
Model overview 210
Technical data 211
Viega Multiplex Trio E-WLAN module 211

Fittings without inlet – overview 212
Multiplex M5/M3 214
Multiplex M9 216
Rotaplex R5/R3 218
Citaplex 220

Drains for shower trays

Tempoplex 221

Domoplex 222

Varioplex 222

Drains for washbasins and bidets

Eleganta odour trap 223

Design drain valves 223

Universal valve Visign V1 224

Odour traps 224

Advantix floor drainage

Product selection 226
Viega Advantix configurator 228
Overview of bathroom, balcony/terrace drains 232
Overview Advantix floor drains 233
Overview bath drains for floor-level showers 234
Advantix bath drains 235
Advantix balcony/terrace drains 240
Advantix floor drains 241
Advantix bath drain 62 mm 242
Advantix bath drain 70 mm 243
Advantix – odour proof drains 244
Advantix stacking element made of plastic 245
Plug-in drains 246

Design products 248
Advantix shower channel 248

Advantix Vario shower channels/wall drains 250
Design grates 251
Stainless steel grates 252
Glass covers 253

Advantix fire protection floor drain 254
Advantix floor drain R120 254
Operating mode 257
Installation in drill holes 258
Special solutions 259

Backflow traps

Basic selection criteria 261
Installation locations 263
Selection aids – product overview 264
Sperrfix – individual protection 266
Combined backflow prevention systems 268
Optifix 3 – floor drain 268
Grundfix – for wastewater free from faecal matter 269
Grundfix Plus Control – for wastewater containing faecal matter 270
Care and maintenance 271

Spare parts management 272

Appendix

Wastewater pipes – product overview 273

Foreword

Viega has been offering installation technology products since 1899. A few years later drain fittings – e.g. for bathtub draining – already had their firm place in the continuously growing product range. The course of the 20th century such items were converted with regard to manufacturing engineering from brass castings to plastic injection mouldings. When copper pipes were introduced for potable water installations in 1965, the development of the complete product range of soldered fittings was an important milestone in the history of the company.

Fig. 1 – 1

For Viega the age of press connecting technology started in 1989. This technology was available at first for stainless steel pipes, and later on also for copper pipes and quickly found enormous acceptance throughout Europe as a cold joining technology that could be installed in a few seconds.

All interesting facts on planning and installation of metal pipe systems with press connectors can be currently found in the 3rd edition of Viega application technology, Volume I.
The guide also explains protective goals in a practice oriented way, for example maintaining the potable water quality in piping systems as well as the necessary know-how for heating systems, gas installations and the diverse options of using press connecting technology for industrial applications.

The developments continued: For 30 years now Viega has been additionally offering plastic pipe systems and later also metal composite pipe systems with press connecting technology. Especially as floor distribution systems for potable water and heating, these systems solutions offer many advantages. Since 1994, pre-wall technology and flushing systems have been additionally completing the product range for installation technology. Among these are today many product ranges of design products, such as WC and urinal flush plates.

The Viega key production sites for the European sales markets

Fig. 1 – 2

Since 1963 – Lennestadt-Elspe
Plastic injection moulding

Fig. 1 – 3

Since 1989 – Attendorn-Ennest
Gunmetal foundry and logistics

Fig. 1 – 4

Since 1991 – Großheringen
Metal press connectors

Fig. 1 – 5

Since 2007 – Niederwinkling
Plastic and metal composite pipes

Example of a Viega Smartpress system

Every four Viega production facilities participate in manufacturing all the components.

- In Lennestadt-Elspe, amongst others, the support body inserts of PPSU are manufactured.
- In Attendorn-Ennest, the connector components with threads of gunmetal are produced.
- The Großheringen location produces connector mouldings of stainless steel.
- Niederwinkling produces plastic and metal composite pipes.

Thus Viega avails of all the material and manufacturing technologies required for an innovative installation system as Viega Smartpress.

This is the 2nd edition of Viega application technology, Vol. II. Supplementary to Volume I already presented it focuses on maintaining the potable water quality while in addition information is given on further fields of competence. High-grade materials suitable for potable water on the one hand and many practical planning and installation information on the other hand are intended to help you hand over systems dependable in operation to your customers. The use of the system as intended will then ensure that the potable water quality is maintained as necessary and avoid that critical stagnation temperatures are exceeded or fallen below.

We have also collected numerous examples of pre-wall and drainage technology with high-grade design products suitable for meeting individual customer desires in your everyday work efficiently and without problems.

With this in mind, we wish you with this new edition of Viega application technology, Volume II again lots of success and all the best for your business to prosper!

Place / Viega establishment, October 2017

Your Viega Team

PLASTIC PIPING SYSTEMS

Fundamentals

Potable water as a foodstuff

Potable water is our most important foodstuff and there is nothing that can replace it.
However, the average consumption has been declining for years now. Consequently, the utility companies have to operate clearly over-dimensioned supply networks both on the supply and the disposal side. The regional utility company is responsible for the proper potable water quality up to the transfer point with the household (water meter) and inside the building the user is responsible for the installation. The user has to ensure in acc. with DIN EN 806-5 that
»... The complete water exchange is ensured at least every 7 days ...«. To ensure that the regularly tapped water quantity is sufficient to guarantee the complete water exchange of the installation, the planning specialist and/or the installer has to create the necessary preconditions by adequately dimensioned nominal pipe diameters and by routing the pipes in considering the hygiene point of view.

Potable water adds to the quality of life and serves to protect health. Appealing bathrooms and eat-in kitchens are an essential feelgood factor in our homes; but clean potable water is also the basis for meal preparation and cleaning.
To achieve this, compliance with the general rules of engineering for planning, construction, commissioning and operation in accordance with the intended use including regular maintenance is indispensable.

Regulations and standards

To ensure the potable water quality in line with the requirements of the EC potable water directive 98/83/EC it is indispensable to use certified components and systems and comply with the applicable standards and regulations – especially for planning, implementation and operation. In May 2012 the European series of standards DIN EN 806-1 – 5 in conjunction with the national collateral standards became authoritative. Since August 2011, the DIN EN 1717 standard stipulates the requirements for the protection of potable water.

For decades the technical rules for sanitary systems have been developing in many different regional ways in the European countries; also because of the different cultures and systems of values. This explains why complete harmonisation of all regional standards could not be achieved in one go by the first edition of the DIN EN 806 series of standards.

Water quality and microbiology

Water supplied inside buildings is normally named differently depending on regions and common uses. In Europe the wording “potable water” applies; in other areas definitions as “potable water” or “domestic water” are those of common use.
It doesn’t matter, which definition we are using: water supplied inside buildings shall be free of pathogens. Contaminated water is dangerous even when we don’t drink it: by breathing water spray (aerosol) from showers, by contact with wounds, by washing foodstuff or producing ice.

Many pathogens are hemerophiles. This is also true for ***legionella pneumophila*** as the causer of atypical pneumonia or the Pontiac fever. As natural inhabitants of pools and puddles, these bacteria became relevant only the moment when large volumes of hot water were stored and then atomised by showers.
In 1976 the first known epidemic through legionella bacteria was caused in the Bellevue Stratford hotel in Philadelphia during the 58th congress of former American soldiers (American Legion) and 180 out of 4,400 delegates fell ill. The disease claimed 29 lives. Despite the immediate research activities it was only in January 1977 that the bacterium could be isolated.
The disease is caused if the bacteria in the water get into the lungs – simply by inhaling the air water mixture (aerosol) in the shower.
Today also air conditioning systems and cooling towers are considered carrying a risk because contaminated aerosols are spread by these systems.

What ***legionella pneumophila*** is in the field of hot water, is ***pseudomona aerugionsa*** in the field of cold water: the indicator bacterium for the hygienic condition of the potable water installation. With multiple resistances against antibiotics and extremely low nutrient requirements, its treatment in patients and also in the installations is often problematic.
One of the main starting points for technical countermeasures is the fundamental knowledge of the living conditions of microorganisms.
All microorganisms have in common that they require suitable living conditions to proliferate excessively. Long dwelling times of the potable water inside the installation (stagnation) support the proliferation of microorganisms. In stagnation, cold potable water usually becomes too hot and heated potable water cools down. This allows bacteria to get into their preferred temperature range (approximately 30 to 50 °C) and also gives them sufficient time (stagnation of water) to proliferate in the critical range.
These are the two cornerstones where technical measures can be taken to minimise excessive bacteria proliferation:

- Adherence to the temperatures for cold and hot water
- Regular water exchange

Maintaining the potable water quality

There are at least three basic requirements on potable water installations:
- Usage comfort – water quantity, temperature and sound protection
- System operation and value preservation – safe, sustainable, energy-efficient
- Maintaining the potable water quality

The first two requirements are the classical goals while the last one came into the focus in recent years only.
Potable water is a foodstuff with an »expiry date«. This expiry date is reached if the potable water quality does no longer meet the requirements of the EC potable water directive at the individual draw-off point.

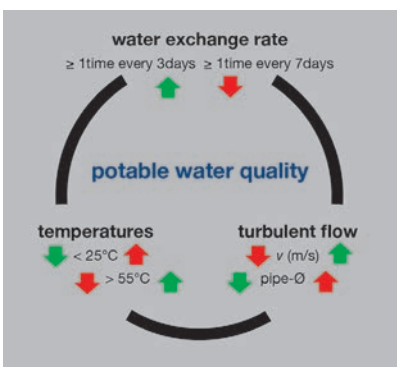

Fig. 1 – 6 Active triangle – potable water quality

Therefore planning specialists and trade professionals must know the major influencing factors for maintaining potable water quality and consider them in their respective areas of responsibility. The systems with their part sections should be planned, implemented and operated in such a way that the following thermal and hydraulic conditions in accordance with **Fig. 1 – 6** are complied with to rule out critical legionella growth in potable water installations.

Operating conditions

The following rules with regard to temperatures and water exchange apply for potable water installations:
- **Temperatures**
  - Potable water < 25 °C is referred to as »cold potable water«. It is assumed that for the normal water exchange no critical growth of microorganisms takes place below this temperature.
  - To counteract heating to over 25 °C, pipelines for cold potable water must not be routed next to heating pipes or pipelines for heated potable water. If this cannot be avoided, heat insulation is obligatory.
  - It is assumed for potable water heated over 55 °C that most of the microorganisms contained in the water are killed.

- **Water exchange**
  - EN 806-5 stipulates that a potable water installation is only operated in accordance with its intended use if at least within seven days a complete water exchange takes place in all part sections and in the potable water heater.
  - Series piping and ring system installations to frequently used sampling points can ensure the required water exchange even to fittings with a low frequency of use – for example draw-off points for garden irrigation – with economic efficiency. Under these conditions it is sufficient in the event of interruptions of use to schedule manual flushing or flushing by a flushing system.

- **Flow-through**
  Old potable water installations frequently include line sections originally used as combined fire extinguishing and potable water pipelines, or operated now as potable water installations only with much fewer draw-off points as originally planned.
  Such overdimensioned piping systems bear hygienic risks: This is on the one hand caused by the too low water exchange itself, and on the other hand due to the lacking turbulent flow which is required to achieve the necessary water exchange across the entire pipeline cross-section (laminar flow). Such part sections should be eliminated immediately and adapted to be adequately dimensioned to suit the new usage conditions.

Illustration **Fig. 1 – 6** shows that none of the three mentioned factors alone ensures that the potable water quality is ensued but that the factors influence the potable water quality also by their reciprocal actions. Against this background it is recommended that these fundamentals be considered in each planning of potable water installations honouring the hygiene aspect (e.g. for pipeline routing in general, routing in shafts with high thermal loads, usage conditions, etc.).

Materials

Another reasons for the good quality of our products is the selection of our materials. They must not only be suitable for the daily routine on the job site but also meet the requirements of the regulations and standards. This is the only way to ensure that the potable water keeps its quality and that the properties of the installation do not change.
The potable water directive clearly stipulates: Materials must not cause impermissible changes of the potable water quality.
Consequently, Viega uses only materials suitable for potable water such as stainless steel, copper and copper alloys.

PE-X

For many decades now this is a proven pipe material for plastic pipes for potable water and heating installations. It has all the familiar advantages; especially for floor distribution such as flexibility from the coil, cutting to length within a few seconds using scissors without deburring and many other things.

Stainless steel

The stainless steel used for fittings and connection pieces with its increased chromium and molybdenum contents is of extra high grade. This is confirmed by the internationally recognised PRE value with regard to corrosion resistance.

Gunmetal

Viega uses this material, being among the core competencies of the Viega manufacturing technologies, for threaded press connectors. It is corrosion-resistant for all potable waters and thus long-term safe and in the contact with potable water meets all national and international regulations and standards.

PPSU

This is the ideal and particularly heat and impact-resistant plastic material for the radial Viega Smartpress connectors without elastomer sealing elements.

Dimensioning of potable water systems

Potable water systems have to be calculated in accordance with DIN EN 806-3 and/or according to the applicable national regulations. Precise calculation of the pipe diameters is the pre-requisite for proper functioning of the complete system. Purpose of the calculation is a high usage comfort with an adequate supply of all cold and hot water draw-off points even in case of peak consumptions.
Stagnation caused by over dimensioning the installation system has to be avoided from the hygienic point of view.
The following characteristics are required for the calculation of the pipe diameters:

- Pipe friction pressure losses – R-values depending on the roughness of the pipe surfaces
- Individual resistances of the connectors and fittings – Zeta values depending on the shape of the connectors

The zeta value is a size-related parameter without a unit of measurement to calculate the pressure losses in individual resistances for different flow speeds.

Pressure losses

While water flows through potable water installation it loses pressure both in the straight pipeline and also in the so-called individual resistances. These pressure losses must be introduced into the calculation of the pipe network to be able to dimension the building installation correctly.
In addition to the pressure losses caused by pipe friction and the individual resistances of the connectors, also the pressure losses resulting from the geodetic height differences in apparatuses (e.g. potable water heater), in backflow preventers and in extraction fittings have to be introduced in the calculation of the pipe network.

Pipe friction pressure losses

The pressure losses caused by the pipeline depend on the following factors:

- Pipe material
- Nominal width and consequently the inside diameter of the pipe
- Volume flow

Pipe roughness – potable water pipelines of different materials

Type of pipe	Pipe roughness [mm]
Stainless steel, copper	0.0015
All-plastics, multi-layer composite	0.0070
Galvanised steel	0.1500

Table 1 – 1

Individual resistances
To calculate the pipe network correctly, the actual resistance coefficients of the fittings and connection pieces used should be considered. This is to ensure that the system is dimensioned according to be actual pressure conditions and planning from a hygienic point of view is achieved with minimum diameters of the pipes.
The resistance coefficients can be requested from the manufacturers of the respective systems.

Different manufacturing processes and materials may result in large differences of the individual resistances with different manufacturers. The resistance coefficients of customary fittings of other brands are by up to 5 times higher and generate pressure losses which are so high that consequently a larger pipe cross-section has to be selected for this pipeline section. Viega places particular emphasis on the optimal flow-through characteristics of its systems to achieve individual resistances that are as small as possible.

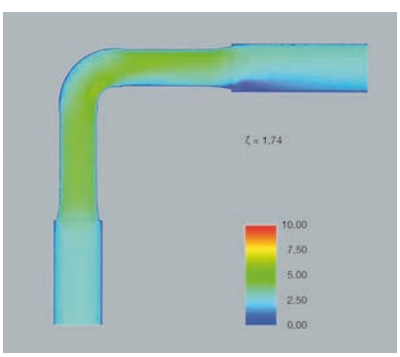

Fig. 1 – 7

Flow behaviour for a Viega Smartpress elbow 90° [ζ = 2.7 / Δp = 54 mbar]

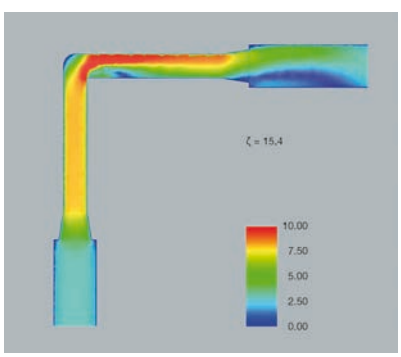

Fig. 1 – 8

Flow behaviour of a standard elbow with a high resistance coefficient [ζ = 17.0 / Δp = 340 mbar]

Fittings and connectors with unfavourable flow conditions having high Zeta values frequently require larger pipe cross-section with increased water volumes. This will on the one hand limit the usage comfort of the end consumer because e.g. he will have to wait for a longer time until the desired hot water temperature has been reached, and on the other hand increases the risk of stagnation in the pipeline.

Planning criteria
When choosing an installation system, the following criteria must be taken into account:
- Potable water hygiene,
- The number and position of sanitary objects,
- The construction method of the installation walls – wet or dry construction,
- Arrangement of the riser pipe
- Wall slots – mill-cut or masoned,
- The installation method – on the bare floor or in hollow spaces,
- The use – frequently or seldom-used extraction fittings.

To minimise stagnation, the installation has to be dimensioned such that the following boundary conditions are met:
- Regular water exchange in all pipeline sections is ensured.
- Seldom used draw-off points are made as series or ring system installations.

Types of pipes – selection
The different properties in routing are decisive when choosing between a dimensionally stable or a flexible pipe.
- **Multilayer pipes**
  are due to their dimensional stability suitable both for basement distribution and riser pipes, and for concealed and visually appealing wall-mounted installations.
- **All-plastic pipes**
  are due to their flexibility particularly suitable for pre-wall installations and for dry construction.

Pipe routing – types of connection

From the economic and hygienic viewpoint, the connection of sanitary objects by series or ring system installations is the best solution.
Ring system installations offer due to the equal distribution of pressure particular advantages and compared to other types of connections the number of sanitary objects which can be connected is significantly higher. In addition, the entire water volume of the floor installation is exchanged when using one draw-off point.
Even rarely used draw-off points, for example outside tapping points for garden irrigation, etc. should be integrated to prevent stagnation in series or ring system installations.
The following types of connection are described in this chapter:

- Series pipeline installation
- Ring system installation
- T-piece installation

Series pipeline installation

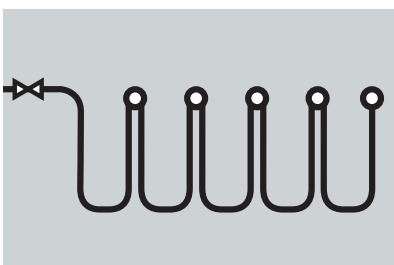

Fig. 1 – 9 Series pipeline installation

Connection of the draw-off points with double wall plates – the last one with a single wall plate.

- Small pipe requirement
- Quick mounting
- Regular water exchange
- Recommended for PWH

The most commonly used draw-off point should be placed at the end of the installation, thus guaranteeing regular water exchange.

Ring system installation

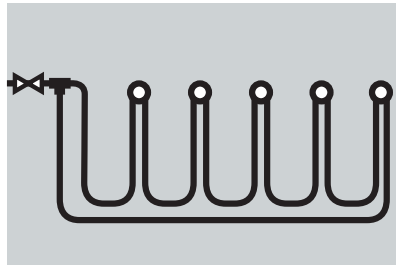

Fig. 1 – 10 Ring system installation

Similar to series pipeline installation, except that the pipeline routed back from the last draw-off point to the T-piece.

- Optimal pressure distribution
- Lower pressure loss in comparison to series installation
- Connection of several sanitary objects in any order
- Optimal water exchange

Recommended installation type for PWC.

T-piece installation

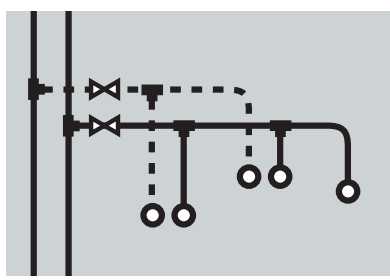

Fig. 1 – 11 T-piece installation

Each draw-off point is connected via a single connection pipeline.

- Small pipe requirement

To prevent stagnation, the single connection pipeline must be kept as short as possible. See also **P. 29.**

Length Expansion – compensation

Pipelines expand with heat. Heat expansion is dependent on the material. Changes in length lead to tension within the installation. These tensions must be equalised with suitable measures.
The following are effective:

- Fixed and gliding points
- Expansion equalisation pieces (expansion bend)

Assembly rules

- Torsional stress due to length expansion must be avoided as much as possible.
- Pipelines without a change in direction require only one fixed point.
- A fixed point is to be placed in the middle of long pipelines, thus allowing length expansion in both directions.
- Fixed pointed shall not be placed on connectors.
- Gliding points shall be positioned in such a way that they do not inadvertently become fixed points during operation.

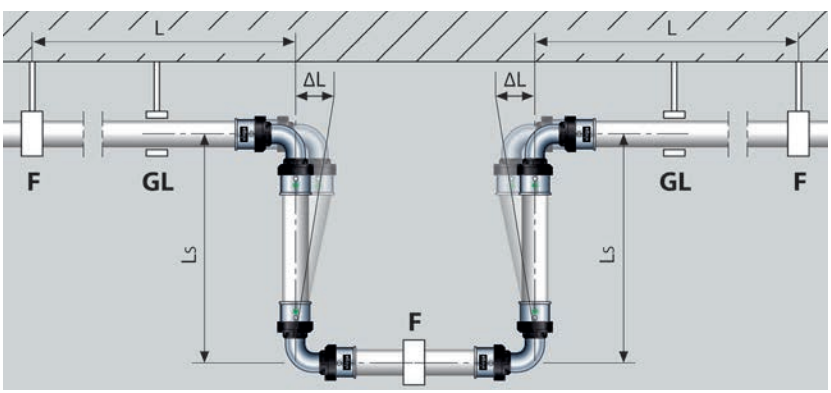

Fig. 1 – 12 U-expansion equalisation

U-expansion equalisation

For the absorption of length expansion

L_{BS} = required expansion bend length

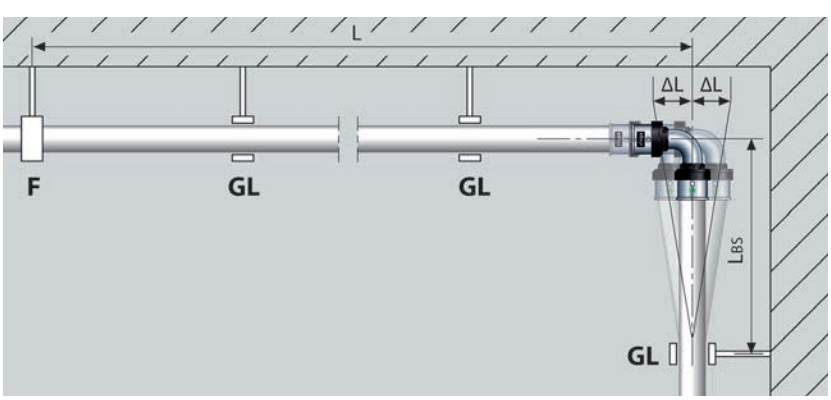

Fig. 1 – 13 L-expansion equalisation

L-expansion equalisation

Arrangement of fixed points (F) and gliding points (GL)

L_{BS} = required expansion bend length

Heat expansion

The heat expansion coefficient is α = 0.03 mm / mK for the following types of pipes:

- PE-Xc / Al / PE-Xc
- PE-RT / Al / PE-RT

Calculation example – expansion bend length

Given:

Temperature difference $\Delta\vartheta$ = 50 K;
Pipe length L = 8 m; Pipe ø = 20 mm

Required

expansion bend length L_{BS}

Calculation

– Starting in **Fig. 1 – 14**, diagram on the left:
From 50 K temperature difference on the x-axis up to the characteristic line for the 8 m pipe length.
– Connect the intersection horizontally with the right-hand diagram up to the intersection of the characteristic line for pipe diameter 20 mm.

Result

Read the value from the x-axis:
L_{BS} = 480 mm

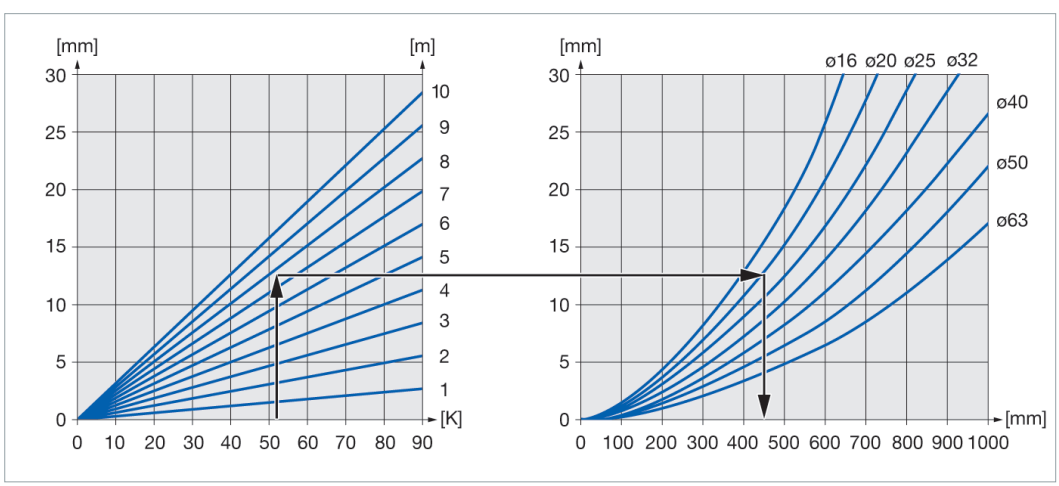

Fig. 1 – 14 Length expansion PE-Xc pipe pipes

Insulation of the pipelines

Heat insulation
Potable water pipelines have to be routed in a way that condensation and heating that impair the quality of the potable water (cold and hot) are prevented. The protection objective is to rule out that permanent temperatures between 25 and 55 °C shall not affect the entire system. Influencing factors are in particular the duration of stagnation and the position and arrangement of the pipes, in particular in suspended ceilings and shafts with mixed assignment. Therefore it must be ensured that the pipelines are routed at an appropriate distance from heat sources such as hot pipelines, stacks, and heating systems. If this is impossible, the pipelines must be insulated with the appropriate layer thicknesses of insulation material.

Hot potable water – PWH
The specific national standards and regulations apply for PWH.

Cold potable water – PWC – in accordance with EN 806-2
Fig. 1 – 15 shows the effect of heat conduction from wall faucet, whose connection of hot potable water has been integrated directly in the circulation circuit.

Fig. 1 – 15 PWH-C heating

If it is operated with temperatures ≥ 60 °C as it is common practice in hospitals for example, danger of scalding the surfaces of wall-mounted faucets will arise. As shown in the illustration, temperatures of 46 °C and above are measured there with the faucet closed. In addition, heat may be transferred to the cold water side, overflows from PWH to PWC, increased wear phenomena at fittings and a higher contamination risk caused by microorganisms.

Experience has shown that this type of connection does not minimise the hygienic risk inside the faucet even for concealed variants of shower faucets – on the contrary, heat conduction may transfer them to the cold potable water with serious consequences. This is because during the night when the faucet is not used 33 °C and even higher temperatures will occur and microbial growth may be promoted here.
If the PWH connection is routed instead via a short cooling section (8–10 x DN), no local increase of bacterial counts can be expected if hot potable water ≥ 60 °C is tapped on a regular basis.

Recommendations for wall mounted and stand-up faucets

Stagnation zones in pipelines can be minimised or even ruled out by planning from a hygienic point of view – But this cannot apply to commercial draw-off faucets, where stagnation in dead areas and along connection hoses will occur. Consequently short cooling sections (flow of heat from top to bottom) are recommended to be installed for fitting connections in PWH-C pipelines. This applies in particular for planning concealed pipe routing as explained in the following. The respective hygienic risks can be minimised in stand-up fittings – also in the event of a refurbishment – by pre-wall U-shaped routing of the PWH connection (Fig. 1 – 17) in upward direction.

As a consequence of this physical relationship, series and ring systems with double wall plates are recommended without any limits also for cold potable water and also for wall fittings. However, it is advised against for fitting connections for hot potable water which are integrated into the circulation circuit. **Fig. 1 – 16** and **Fig. 1 – 18** show the respective pipeline routes.

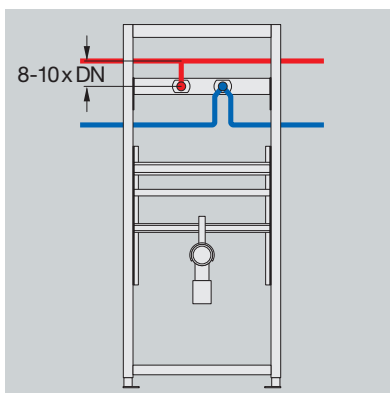

Fig. 1 – 16 Cooling section of wall fitting

Fig. 1 – 17 Cooling section of stand-up fitting

Metrological tests confirm that cooling sections with a length of 8 – 10 x DN can already prevent the critical heat transfer to the cold potable water via the faucet and consequently, the hygienic risk described is reduced and/or largely ruled out if the installation is operated as intended.

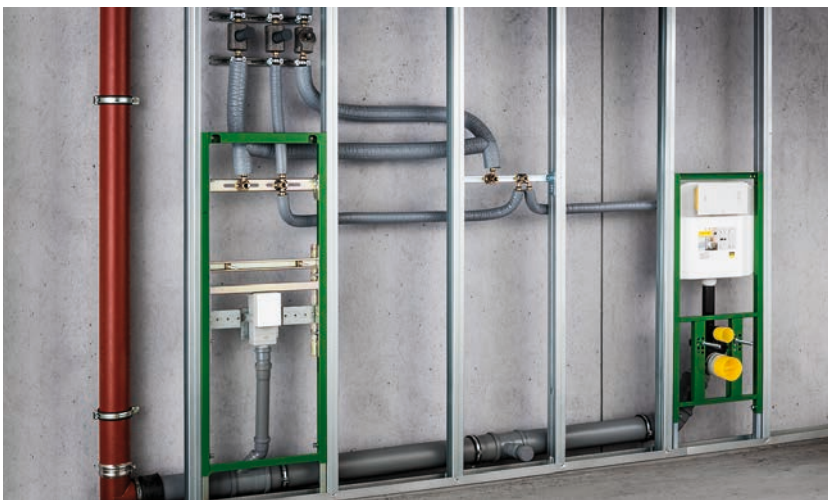

Fig. 1 – 18 Raw installation with cooling sections

Soundproofing insulation
Sounds in potable water installations are predominantly caused by faucets and sanitary objects. The pipelines transmit the sound producing the audible airborne sound.

The following measures lower noise creation and transfer
- Correct planning / dimensioning of the complete system
- Observation of the maximum flow speed
- Installation of low-noise faucets
- Use of pre-wall systems
- Fastening of pipelines with sound protection elements

Installation technical characteristics
- Sound disconnection of faucets
  Direct contact of wall plates with the installation body should be avoided. Sound absorbers and mounting units should be used, for example the ones of the Viega Smartpress system.

- Fixing and insulation of the pipelines
  – Use pipe clamps with sound insulating inlays for fastening concealed pipes.
  – Prefer pre-insulated pipes.
  – Insulate blank pipes on site.

Viega Smartpress press connector system

System description

Product group

L6

Intended use
The Viega Smartpress installation system consists of Viega Smartpress pipes and Viega Smartpress connectors. Observe the processing instructions of this application technology and the user instructions.

The system is suitable for the following applications:

- Potable water installations
  - Without limitations for potable water in accordance with the potable water directive
  - Operating temperature T_{max} = 70 °C
  - Operating pressure p_{max} = 1.0 MPa (10.0 bar) corresponding to classes 1 and 2 according to EN ISO 21003
- Heating systems
  - Operating temperature T_{max} = 80 °C
  - Operating pressure p_{max} = 1.0 MPa (10.0 bar) corresponding to classes 4 and 5 according to EN ISO 21003
- Gas installations

Remind: national regulations apply to the acceptance of gas piping materials and components
  - Only with Viega Smartpress gas pipe models 6709, 6709.1, 6703
  - Operating temperature T_{max} = 60 °C
  - Operating pressure p_{max} = 0.5 MPa (5.0 bar)

Technical information and descriptions in this book pertain to Viega original parts and the corresponding tools.

The use of Viega Smartpress for applications other than those described must be approved by the Viega Service Center.

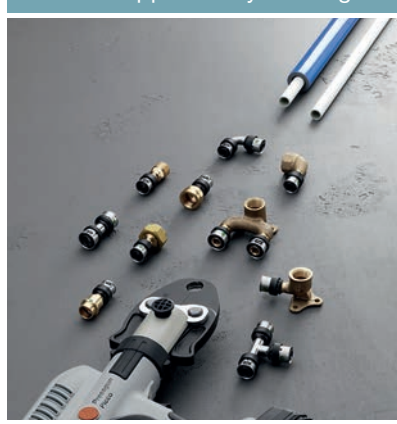

Fig. 1 – 19

Viega Smartpress press connectors

Press connectors of sizes 20, 25, 32 mm can be used in combination with Viega Smartpress gas pipes also for gas installations.

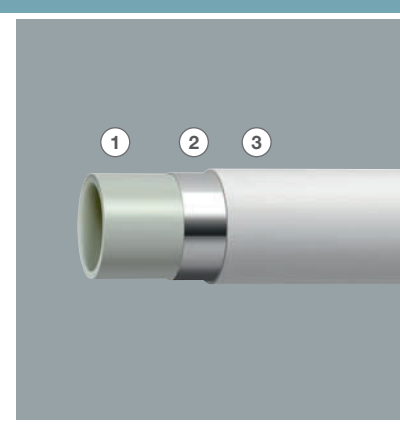

Fig. 1 – 20

Viega Smartpress multilayer pipes

① PE-Xc-Inliner
② Aluminium seal coat
③ PE-Xc jacket

Technical data

Viega Smartpress PE-Xc/Al/PE-Xc pipes, dimensionally stable, with external oxygen seal coat of aluminium	**Pipes**
The following data is printed-on consecutively in axial direction: Manufacturer, system name, pipe material, size/wall thickness, permissible operating temperature/pressure, certification.	**Pipe marking**
■ 5-m-rods, coiled bundle	**As-delivered condition**
■ Gunmetal, stainless steel, PPSU	**Press connector material**
■ 16/20/25/32/40/50/63	**Nominal dimensions [mm]**
■ Class E according to EN 13501-1	**Fire resistance class**

Viega Smartpress PE-Xc/Al/PE-Xc pipes – product range

Type of pipe	Size	Areas of application
Rods	16, 20, 25, 32, 40, 50, 63	Potable water/heating
	20, 25, 32	Gas
Coiled bundle without protective pipe	16, 20, 25, 32	Potable water/heating
	20, 25, 32	Gas
Coiled bundle with protective pipe, black, blue, red	16, 20, 25	Potable water/heating
Coiled bundle with protective pipe, yellow	20, 25	Gas
Coiled bundle with surrounding insulation 6 mm, blue [λ = 0.040 W/mK]	16, 20	Potable water/heating
Coiled bundle with surrounding insulation 9 mm, blue [λ = 0.040 W/mK]	25	Potable water/heating

Table 1 – 2

Viega Smartpress PE-RT/Al/PE-RT pipes – product range

Type of pipe	Size	Areas of application
Coiled bundle without protective pipe	16, 20	Potable water/heating
Coiled bundle with protective pipe, black		Potable water/heating
Coiled bundle with surrounding insulation 6 mm, blue [λ = 0.040 W/mK]		Potable water/heating
Coiled bundle with surrounding insulation 9 mm, blue [λ = 0.040 W/mK]		Potable water/heating

Table 1 – 3

Viega Smartpress PE-Xc/Al/PE-Xc and PE-RT/Al/PE-RT pipes – Technical data

d x s [mm]	d_i [mm]	Pipe weight [g/m]	Minimum bending radius [x d_a]		Heat conductivity [W/mK]	Average length expansion [mm/mK]	Pipe roughness [mm]	External oxygen seal coat
			Hand	Tool				
16 x 2.0	12.0	105	5.0	2.0	0.4	0.03	0.007	Aluminium
20 x 2.3	15.4	145		2.3				
25 x 2.8	19.4	230		3.0				
32 x 3.2	25.6	380		3.5				
40 x 3.5	33.0	525	With tool	4.0				
50 x 4	42.0	735		4.5				
63 x 4.5	54.0	1090						

Table 1 – 4

Application technology

Laying and fixing pipes

The following assembly rules apply for installations with Viega Smartpress pipes:

- Only pipe clamps with chloride-free sound insulating inlays should be used to secure the pipes.
- Existing installations should not be used as supports for other pipelines and components.
- Do not use pipe hooks.
- Observe distance to connectors.
- Observe the expansion direction – plan fixed and gliding points.

Fixing elements of pipelines should be installed being disconnected from the installation body. Any structure-borne sound caused by thermal length variations and pressure surges in the fluid transported or on the installation body must not be transmitted to other components. The fixing distances **Table 1 – 5** should be observed.

Viega Smartpress pipes – fixing distances

d	Horizontal routing	Vertical routing
16	1.00	1.30
20	1.00	1.30
25	1.50	1.95
32	2.00	2.60
40	2.00	2.60
50	2.50	3.25
63	2.50	3.25

Table 1 – 5

Press connectors

Fig. 1 – 21

Viega Smartpress press connectors seal the pipe over the entire surface area of the PPSU support body and not by an O-ring inserted separately. Mounting becomes simpler and safer because poorly deburred or uncalibrated pipe ends cannot damage the sealing surface.

Through special manufacturing processes it is achieved that the fittings have only small pressure losses thus positively influencing the dimensioning of potable water pipelines.

Features

- Jointing technology without O-ring
- No calibration and deburring of the pipes – saves up to 30 % of mounting time
- Flow-optimised inside geometries to achieve similar pipe cross-sections
- Safety created by the SC-Contur
- Inspection window for checking the insertion depth
- Corrosion resistance through high-grade materials

Zeta values

The Zeta value is a resistance coefficient resulting from the calculation of pressure drop after water flow-through a fitting body. It is an adimensional value and allows comparing different bodies. The goal is a Zeta value which is as small as possible. See also **P. 23**.

Viega Smartpress press connectors – Zeta values at flow speed 2 m/s

		16 x 2.0	20 x 2.3	25 x 2.8	32 x 3.2	40 x 3.5	50 x 4.0	63 x 4.5
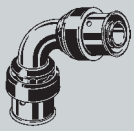	**Elbow 90 °**	2.7	2.1	2.6	1.9	1.2	1.1	1.5
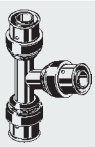	**T-piece straight-through form**	2	1.7	2.1	1.4	0.8	0.8	0.9
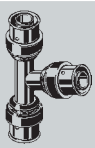	**T-piece outlet**	3.6	3.7	4.7	4.1	2.7	3.2	4.5

Table 1 – 6

Viega Smartpress wall plates – Zeta values at flow speed 2 m/s

	Component	16 x ½	20 x ½	20 x ¾	25 x ½
	Wall plate	2.5	2.4	2.7	-
	Double wall plate straight-through form	3.9	3.8	_	4.5
	Double wall plate outlet	3.6	3.6	_	5.8

Table 1 – 7

SC-Contur

Fig. 1 – 22

Viega Smartpress press connectors are equipped with the SC-Contur – identified by the green spot on the press sleeve.
As in all Viega installation systems, Viega Smartpress press connectors come also with the SC-Contur – erroneously unpressed connections will be detected as leaky during filling up the system for the leakage test and can be pressed immediately.

The SC-Contur is effective
- with water leakage test in the pressure range between 0.10–0.65 MPa (1.0–6.5 bar).
- with dry leakage test in the pressure range between 22 hPa–0.30 MPa (22 mbar–3.0 bar).

Marking

Fig. 1 – 23

Viega Smartpress press connectors are identified as follows:
- Viega logo
- Green spot for the SC-Contur
- Size – additionally specified on the connector body

Compatibility of connectors/pipes

Proper functioning of Viega Smartpress connectors is ensured only together with Viega pipes from the Viega Smartpress, Pexfit Pro and Pexfit Fosta systems. Use of pipes from other systems or manufacturers has not been tested and therefore their proper function cannot be guaranteed.
Installation of Viega Smartpress pipes with old Pexfit connectors is not possible.
Please contact the Viega Service Center for questions on this subject.

Viega Smartpress / Pexfit Fosta / Pexfit Pro – Compatibility of connectors/pipes

Connectors \ Pipe	**Pexfit Fosta** Fluid: Water Model 27XX	**Pexfit Fosta** Fluid: Gas Model 27XX	**Pexfit Pro / Viega Smartpress** Fluid: Water Model 47XX	**Viega Smartpress** Fluid: Gas Model 67XX
Pexfit Model 27XX	✓	✓	–	–
Pexfit Pro gunmetal Model 47XX	–	–	✓	–
Pexfit Pro PPSU Model 47XX	✓	–	✓	–
Viega Smartpress DN 16–63 Fluid: Water Model 67XX	✓	–	✓	–
Viega Smartpress d 20–32 Fluid: Gas Model 67XX	–	–	–	✓

Table 1 – 8

Compatibility with Viega Pexfit Fosta

Viega Smartpress press connectors can be combined for potable water and heating installations also with Pexfit Fosta pipes according to **Table 1 – 9**.

Viega Smartpress connectors – permissible pipe combinations

Pexfit Fosta pipe Model	**PE-Xc/Al/PE-Xc pipe** For potable water and heating installations	**d**
2703	Rods	16 x 2.0 20 x 2.3 25 x 2.8
2705	Blank	16 x 2.0 20 x 2.3 25 x 2.8
2704	Protective pipe, black	16 x 2.0 20 x 2.3
2705.5	Surrounding insulation 6 mm, blue, $\lambda = 0.040$ W/mK	16 x 2.0 20 x 2.3

Table 1 – 9

Pexfit Fosta gas pipes models 2709 and 2709.1 must not be connected with Viega Smartpress press connectors.
For the crossover to Viega Smartpress gas pipes model 6715G must be used.

Compatibility with Viega Pexfit Pro

Viega Smartpress press connectors can be combined for potable water and heating installations also with Pexfit Pro pipes according to **Table 1 – 10**.

Viega Smartpress connectors – permissible pipe combinations

Pexfit Pro pipe Model	**PE-Xc/Al/PE-Xc pipe** For potable water and heating installations	**d**
4703	Rods	16 x 2.0 20 x 2.3 25 x 2.8 32 x 3.2 40 x 3.5 50 x 4.0 63 x 4.5
4705	Blank	16 x 2.0 20 x 2.3 25 x 2.8 32 x 3.2
4704	Protective pipe, black	16 x 2.0 20 x 2.3 25 x 2.8
4704.1	Protective pipe blue, red	16 x 2.0 20 x 2.3
4705.5	Surrounding insulation 6 mm, blue, $\lambda = 0.040$ W/mK	16 x 2.0 20 x 2.3
4705.6	Surrounding insulation 9 mm, blue, $\lambda = 0.040$ W/mK	25 x 2.8
	PE-RT / Al / PE-RT pipe	
4708	Blank	16 x 2.0 20 x 2.3
4708.1	Protective pipe, black	16 x 2.0 20 x 2.3
4708.5	Surrounding insulation 6 mm, blue, $\lambda = 0.040$ W/mK	16 x 2.0 20 x 2.3

Table 1 – 10

Storage and transport
Viega Smartpress components can be stored outdoors up to three months in their sealed original packings if protected from rain or high air humidity. Protect packings safely from mechanical damage during transport.

Corrosion protection
Contact with chloride-containing materials or other aggressive chemicals may cause corrosion of components made of stainless steel.

Contact between the system components and aggressive chemicals is not permitted. An excessive chloride concentration in the fluid or the environment can lead to corrosion in stainless steel systems. The chloride concentration in the medium must not exceed the maximum of 250 mg/l.

The following rules apply to avoid contact with chloride-containing materials:
- Insulating materials must not have a water-soluble chloride ion content that exceeds 0.05 % by weight.
- Sound insulating inlays of the pipe clamps must not contain leachable chlorides.
- Stainless steel components must not come into contact with building materials or mortar containing chloride.
- If external corrosion protection is required, DIN EN 806-2 must be observed.
- Never repair damaged components but replace them.

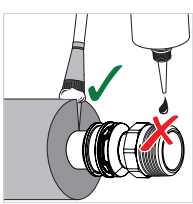

Thread lockers containing solvents can lead to material damage and leaks in plastic parts of pipe connections. As a result, water damage may be caused.
- Only use commercially-available hemp in connection with thread sealing paste or certified sealing tape for potable water.
- Using adhesive to glue the edges of the insulating material of the system installed is harmless.
- Please contact the Viega Service Center if you have any questions.

Assembly

Required tools

We recommend using Viega original tools or equivalent tools for installations with Viega press connector systems.

Fig. 1 – 24 Press machine

The following tools are required for producing a press connection:

- Press machine with constant pressing force
- Viega Smartpress press jaws for plastic piping systems – model 2799.7 or 2784.7
- Viega Smartpress press rings for plastic piping systems – model 2796.1 for sizes 16–32 mm
- Hand press tool – model 2782.5 for sizes 16–25 mm
- Pipe shear – model 5341 for sizes 16–25 mm
- Pipe cutter – model 2191 for sizes 32–63 mm
- Bending tool – model 5331 or 5331.2

- Do not use hand saws or electric saws or angle grinders for cutting pipes to length.
- Use exclusively the hand press tool model 2782.5 with ratchet function for manual pressing of Viega Smartpress connectors.
  Do not use hand press tool model 2782 (year of construction until 08/2004) for the PE-Xc system, PB-system.

Bending pipes

We recommend using the Viega internal bending tool model 5331.2 of plastic for bending Viega Smartpress pipes. Do not use smaller bending radii as specified in **Table 1 – 11**.

Viega Smartpress pipes – bending radii – tools

d	Bending radius x d	Model 5331	Model 5331.2
16	2.0	✓	✓
20	2.3	✓	✓
25	3.0	–	
32	3.5	–	
40	4.0	–	
50	4.5	–	
63	4.5	–	

Table 1 – 11

Viega Smartpress pipes of sizes 16–32 mm can be bent manually – smallest bending radius 5 x d.

Using internal bending springs of metal is not permitted due to the possible damage to the pipe surface and introduction of contaminants into the installation.
We recommend the Viega plastic internal bending tool (model 5331.2) made of plastic.

NOTE!
Product damage when bending directly at the connector!
Extreme bending directly at the connector may cause damage to pipe and connector and result in leaks.
Select a bending point with sufficient distance to the connector to avoid damage.

Shortening the pipes

We recommend using the Viega tools intended for proper shortening of Viega multilayer pipes.

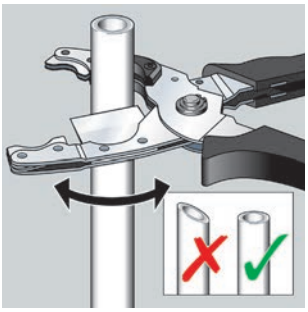

Fig. 1 – 25 Pipe shear

Use pipe shear model 5341 for a properly cutting to length pipe sizes 16–25 mm. Ensure that the cut surface is clean and straight – replace worn blades.

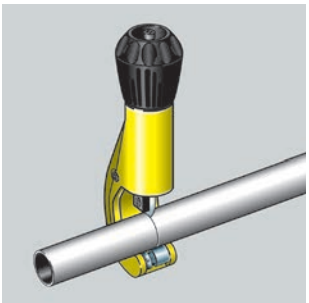

Fig. 1 – 26 Pipe cutter

Use pipe cutter model 2191 for properly cutting to length pipe sizes 32–63 mm.

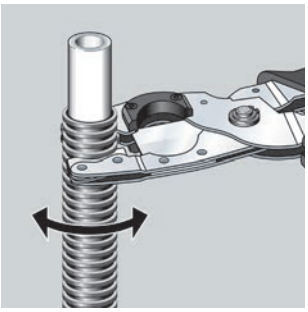

Fig. 1 – 27 Protective pipe cutter

Cut the protective pipe to length with the protective pipe cutter model 5341.

Stripping the pipes

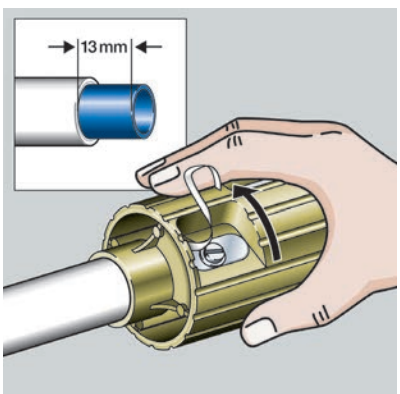

Fig. 1 – 28

When using Pexfit Fosta pipes models 2703; 2704; 2705; 2705.5; 2709 and 2709.1, the section of the length of the press sleeve must be removed from the jacket and the aluminium layer using the stripping tool model 2758.5. Using other tools is not permitted.

Use exclusively spare blades model 2758.1.

Establishing press connections

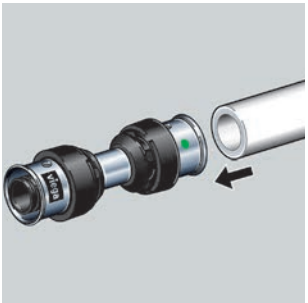

Fig. 1 – 29

Push the pipe into the press connector until the pipe end is visible in the inspection window.

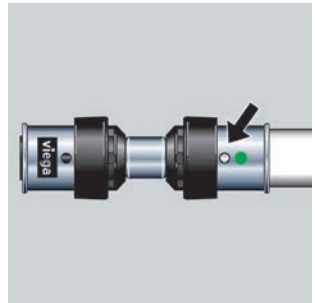

Fig. 1 – 30

Check insertion depth in the inspection window.

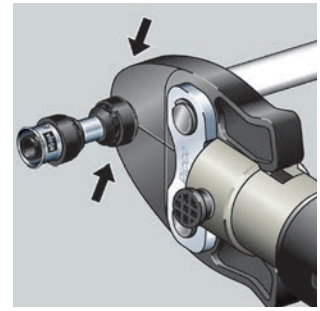

Fig. 1 – 31

Open press jaw and place at a right-angle onto the connector.

Observe the distances in section "Space requirements and distances".

Start pressing.

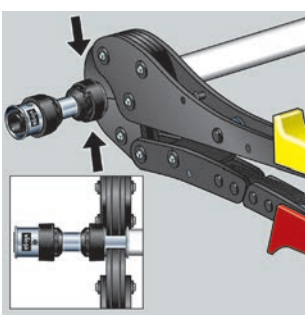

Fig. 1 – 32

Pressing with hand press tool model 2782.5

Open hand press tool and place at a right-angle onto the connector.

Observe the distances in section "Space requirements and distances".

Carry out pressing.

Press connections – space requirements and distances

The minimum distances to components must be observed to establish press connections in a professional manner. Pressing with lower distances may result in leaks of the connections.

Minimum space requirement in wall slots

Press machine type		Pressgun 5/4E/4B PT3-EH/AH, type 2 (PT2)			Pressgun Picco Picco		
[mm]	ø d_a	a	b	c	a	b	c
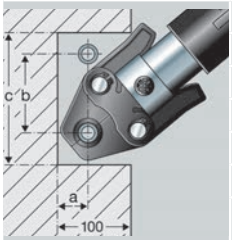	16	20	90	140	20	80	120
	20	20	90	140	21	80	120
	25	25	90	140	25	80	120
	32	30	95	155	30	80	160
	40	35	92	178	–	–	–
	50	40	95	205	–	–	–
	63	54	140	262	–	–	–

Table 1 – 12

Minimum distance between pipelines

Press machine type		Pressgun 5/4E/4B PT3-EH/AH, type 2 (PT2)		Pressgun Picco Picco	
[mm]	ø d_a	a	b	a	b
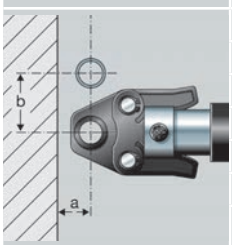	16	15	45	15	48
	20	16	45	15	50
	25	23	58	20	55
	32	21	65	25	70
	40	28	70	–	–
	50	40	85	–	–
	63	56	125	–	–

Table 1 – 13

Minimum distance between pipe and wall

Press machine type		Pressgun 5/4E/4B PT3-EH/AH, type 2 (PT2)			Pressgun Picco Picco		
[mm]	ø d_a	a	b	c	a	b	c
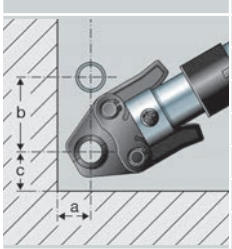	16	20	76	25	20	70	28
	20	20	76	25	21	74	28
	25	25	80	35	25	75	35
	32	30	90	35	30	80	40
	40	35	92	43	–	–	–
	50	40	95	55	–	–	–
	63	54	140	61	–	–	–

Table 1 – 14

Radiator connection – mounting examples

Out of the wall with radiator connection block mod. 6797.6

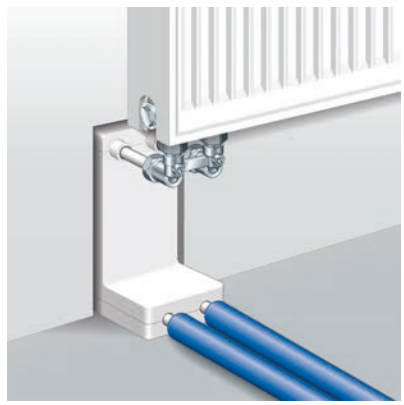

Fig. 1 – 33 Radiator connection block – model 6797.6

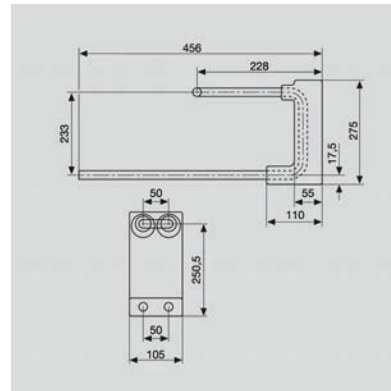

Fig. 1 – 34 Installation dimensions – model 6797.6

- Radiator connection block for direct connection with Viega Smartpress press connector
- No connection work in the wall slot

Material requirement – radiator connection with radiator connection block 6797.6

	Model No.	Article-No.	Quantity	Name / function
	1096.9 or 1096.8	308 872	1	**Adapter set**, for connection with valve radiator with R¾
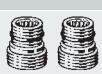		357 122	1	**Adapter set**, for connection with valve radiator with R½
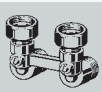	–	On site	1	Radiator connecting piece
	1037	614 522	2	**Connection screw fitting,** for connecting dimensionally stable Viega Smartpress pipes, euro cone and clamping connection
	6797.6	730 512	1	**Viega Smartpress radiator connection block,** with PE-Xc/Al/PE-Xc pipe, for direct connection with Viega Smartpress press ends, pre-insulated, gauges for bore hole connection pipes 50 mm, construction height 255 mm

Table 1 – 15

Out of the wall with radiator connection block mod. 6797.7

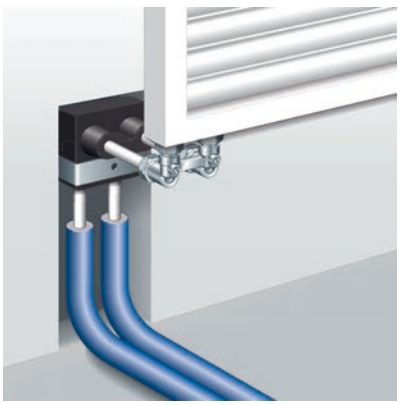

Fig. 1 – 35 Radiator connection block – model 6797.7

- Radiator connection block for direct connection with Viega Smartpress press connector
- No connection work in the wall slot
- Use for varying levels – e.g. for connection with a bathroom radiator
- Assembly out of the wall or out of the floor

Material requirement – radiator connection with radiator connection block 6797.7

	Model No.	Article-No.	Quantity	Name / function
	1096.9 or 1096.8	308 872	1	**Adapter set**, for connection with valve radiator with R¾
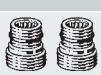		357 122	1	**Adapter set**, for connection with valve radiator with R½
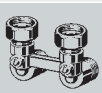	–	On site	1	Radiator connecting piece
	1037	614 522	2	**Connection screw fitting,** for connecting dimensionally stable Viega Smartpress pipes, euro cone and clamping connection
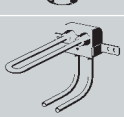	6797.7	730 529	1	**Viega Smartpress radiator connection block,** with PE-Xc/Al/PE-Xc pipe, for direct connection with Viega Smartpress press ends, pre-insulated, gauges for bore hole connection pipes 50 mm

Table 1 – 16

Out of the floor with screw fittings

Fig. 1 – 36 Radiator direct connection

Fig. 1 – 37 Clamping ring screw fittings

- Direct connection with radiator connection piece and clamping ring screw fittings
- Small material expenditure, few connection points
- Optionally radiator connection out of the wall: With angle-shaped radiator connection piece and supply pipes out of the wall with bent pipes.

Observe bending radii **Table 1 – 11**. For radii $\leq 2 \times d_a$, use fittings.

Material requirement – radiator connection out of the floor with screw fittings

	Model No.	Article-No.	Quantity	Name / function
	1096.9 or 1096.8	308 872	1	**Adapter set,** for connection with valve radiator with G ¾
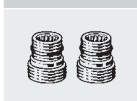		357 122	1	**Adapter set,** for connection with valve radiator with Rp ½
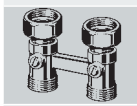	–	On site	1	**Radiator connecting piece**
	1037	614 522	2	**Connection screw fitting,** for connecting dimensionally stable Viega Smartpress pipes, euro cone and clamping connection
	6718	e. g. 729 929	2	**Viega Smartpress T-piece,** with SC-Contur, in stainless steel

Table 1 – 17

Out of the floor with radiator connection block mod. 6775.31

Fig. 1 – 38 Viega Smartpress radiator connection block

Connection with Viega Smartpress radiator connection block.

- Stainless steel material
- Crossovers to Viega Smartpress
- Pre-insulated and with fixing material
- Stainless steel supply and return closed loop to facilitate leakage test
- Connection pipes 400 mm – for high floor constructions

Material requirement – radiator connection out of the floor with radiator connection block 6775.31

	Model No.	Article-No.	Quantity	Name / function
	1096.9 or 1096.8	308 872	1	**Adapter set,** for connection with valve radiator with G ¾
		357 122	1	**Adapter set,** for connection with valve radiator with Rp ½
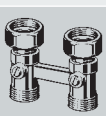	1096.5	359 102	1	**Radiator connecting piece**, straight-through form, brass matt, nickel-plated, can be shut off, with Viega plug-in seat
	94385.1	105 358	2	**Screw fitting**, for copper and steel pipe with Viega plug-in seat, nickel-plated
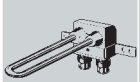	6775.31	698 461	1	**Viega Smartpress radiator connection block,** with Viega Smartpress press connections, pre-insulated, gauges for bore hole connection pipes 50 mm

Table 1 – 18

Connection by manifold

Fig. 1 – 39 Single connection pipeline

Individual connection of the radiators by a manifold.
Supply and return flows will be routed to the supply and return flow beams of the manifold respectively.

- Connection with clamping ring screw fitting with euro cone
- The radiators are connected according to one of the examples shown above

Material requirement – radiator connection with single connection pipelines from the manifold

	Model No.	Article-No.	Quantity	Name / function
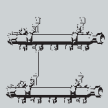	1078	e. g. 586 249	1	**Manifold 1",** of stainless steel, for radiators, with G ¾ for euro cone, flat sealing with union nut G 1, with wall bracket, connectable to the left and right sides, with bleeder valve, prepared for measuring connection G ½
	6735 or 1037	e. g. 730 598	2	**Viega Smartpress connection screw fitting,** Press connection, euro cone
		e. g. 614 522	2	**Connection screw fitting,** for connecting dimensionally stable Viega Smartpress pipes, euro cone and clamping connection

Table 1 – 19

Out of the wall with radiator connection elbows mod. 6777

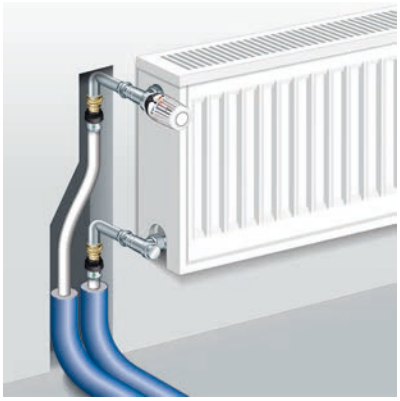

Fig. 1 – 40 Radiator connection elbows

Connection with Viega Smartpress radiator connection elbows.

With 15 mm stainless steel pipe ends, suitable for screw fitting with Rp ½ thermostat valve.

Material requirement – radiator connection out of the wall with radiator connection elbows

	Model No.	Article-No.	Quantity	Name / function
	–	on site	1	**Radiator valve**, angle-shaped, with Viega press ends
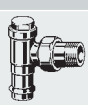	2272.1	326 357	1	**Return pipe screw fitting**, angle-shaped, nickel-plated, can be shut off
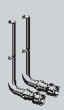	6777	730 291	1	**Viega Smartpress radiator connection elbow,** with Viega Smartpress press connections, 2 elbows in a set

Table 1 – 20

PLASTIC PIPING SYSTEMS 1

PRE-WALL TECHNOLOGY 2

DRAINAGE TECHNOLOGY 3

PRE-WALL TECHNOLOGY
Fundamentals

Bathroom planning

Space requirement
The necessary space requirement for sanitary rooms results from the floor-space of the furniture and fixtures, the necessary movement area and the statutory stipulated distances. The design of the space requirement for sanitary rooms is stipulated in DIN 18 022 »Domestic kitchens, bathrooms and WCs; design principles«. »Furniture and fixtures« are defined as »elements necessary for implementing the function of the room«. According to this definition, sanitary objects are counted among the »furniture and fixtures«, which can be introduced both by the building owner and the user of the home.

Accessibility
Against the background of demographic change, the topic of »Barrier-free bathrooms« becomes more and more important for planning and implementation of new buildings and renovations. The constructional measures to be implemented for persons with physical limitations are defined in DIN 18 040 parts 1 and 2, and in VDI guideline 6008 sheet 2. The planning objective is designing barrier-free living spaces in the private and public areas that can be largely used in common by persons with and without physical limitations.

Planning of barrier-free sanitary rooms
Optimal planning of sanitary rooms is possible only if detailed data is available about the kind of usage and the expected usage behaviour. Solutions should be found which fulfil as many of these requirements as possible also in view of the fact that the type of usage of buildings and building parts may change in the long run. It is useful to record the individual boundary conditions in a room book before planning is started and document the expected intended use in this book. It is only with the aid of the binding usage descriptions that the planer is able to define the best suitable components ensuring that the planning goals are achieved.

Planning criteria – sanitary objects

The following criteria have to be observed when selecting the sanitary objects:

- Type of material and dimensioning of the piping systems
- Structural analysis of walls and pre-wall installations suitable for fixing support systems or support hinged handles
- Calculation of the minimum space requirement as the total of footprint, movement and traffic areas and pre-wall installations
- Definition of the mounting heights

WCs

- WC ceramic
  - Projection 700 mm
  - Backrest
  - Seat height 460–480 mm

- Movement areas: Clearance left/right next to the WC ceramic = 900 mm, in front of the WC 1500 x 1500 mm
- Fold-up support hinged handles on both sides
- Flush actuation touchless or with push button within reach

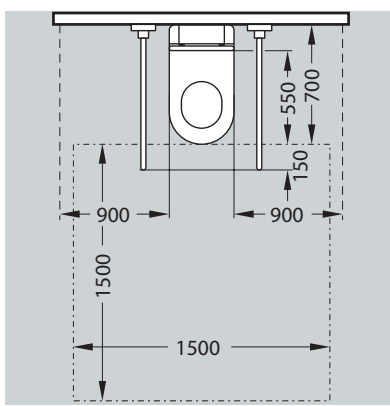

Fig. 2 – 1 WC system

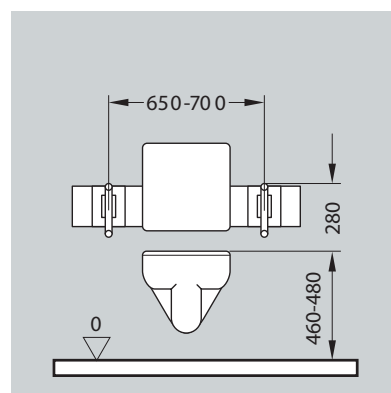

Fig. 2 – 2 WC system – dimensions

Urinals

- Vertical handholds at suitable height
- Touchless flush actuation

Washbasins

- Wheelchair-compatible design with legroom: Depth 300 mm/height 670 mm
- Upper edge of WB 800 mm
- Movement area in front 1500 x 1500 mm
- Mirror with height 1000 mm immediately over the WB

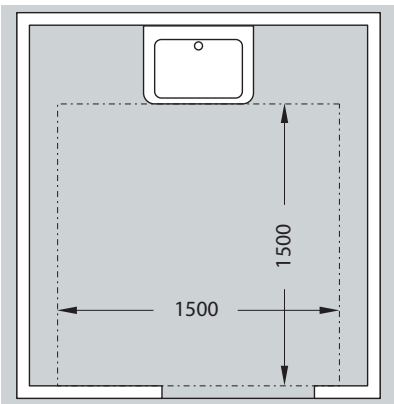

Fig. 2 – 3 WB system

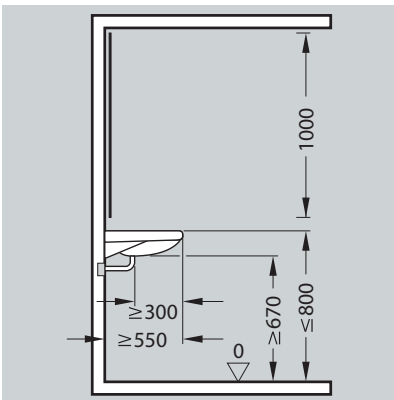

Fig. 2 – 4 WB system – dimensions

Showers

- Design on floor level without barriers
- Floor covering slip resistant
- Handholds horizontally and vertically at suitable height
- Shower seat with backrest and support hinged handles on both sides
- Movement area in front 1500 x 1500 mm

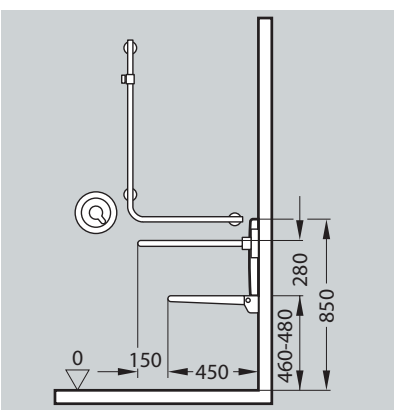

Fig. 2 – 5 Shower – dimensions 1

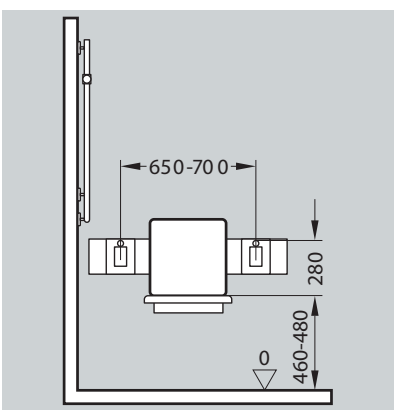

Fig. 2 – 6 Shower – dimensions 2

Movement areas according to DIN 18 040-2

Movement areas in a sanitary room may overlap.

Movement areas

① WC
② Washbasin
③ Shower

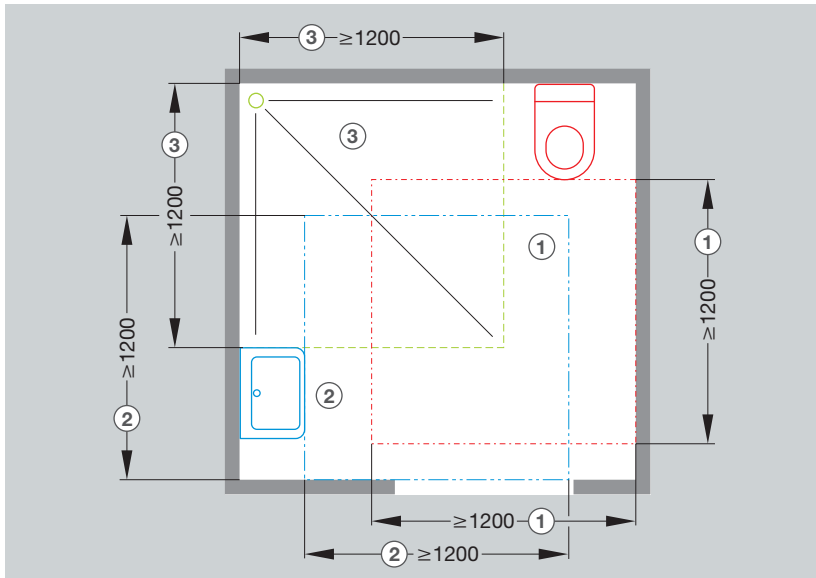

Fig. 2 – 7 Sanitary room – movement areas

Load requirements for sanitary objects

Viega conducted in-house type examinations based on the requirements of DIN 18 040-2 confirming the stability of installation walls.

Load test

Viega installations

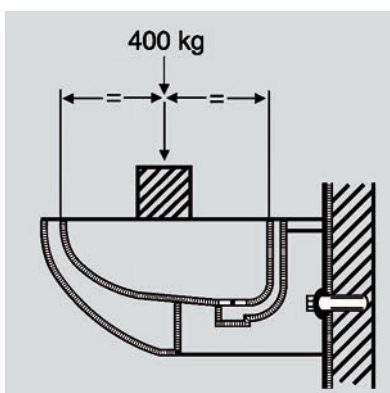

Fig. 2 – 8 WC – load test

Max. load of sanitary object centre in the Viega test

- WC/bidet – 400 kg
- Washbasin and urinal – 150 kg
- Fixing element
  e.g. support hinged handle – 100 kg

Sample installation – barrier-free WC

Barrier-free WC systems can be constructed with all Viega pre-wall systems.

Fig. 2 – 9 WC – accessible for disabled people

The example includes a list of materials for a pre-wall installation with Viega Eco Plus and the following equipment:

- Concealed cistern
- Infrared flush plate for touchless flush actuation
- Two support hinged handles with radio actuation
- Additional external WC flush actuation with potential-free button

Material requirement – Viega Eco Plus pre-wall installation

Piece	Product name	Model	Art. No.	Instructions for use
1	**WC element**	8161.2	606664	Seat height (upper edge WC ceramic) 460 mm
2	**Fixing element**	8169.2	683719	Support hinged handle holder
1	**Mounting rail**	8001	283872	For line mounting of the pre-wall elements
2	**Fixing set**	8173	460440	Element fastener
1	**Installation set**	8350.14	655426	Concealed mounting power pack (cistern connection on site)
2	**Support hinged handles (e.g. HEWI)**	Not included in Viega product line		
1	**Flush plate Visign for Public 5**	8326.16	699529	For touchless and manual flush actuation
1	**Connection cable sensitive**	8355.90	631840	For external flush actuation by on-site and commercial button or potential-free contact
1	**Extension cable with adapter**	8350.36	696184	For flush actuation by button
2	**WC radio actuation (e.g. HEWI)**	Not included in Viega product line		
1	**Button**			

Table 2 – 1

Electrical equipment installations

Potential equalisation

The installation requirements for rooms with bathtubs and/or showers required that conductive pipelines in new buildings (metal installation and wastewater pipes) must be equipped with potential equalisation – it is not required any longer for tubs and showers.

The Viega Smartpress potable water installation systems are made of plastic and not conductive – therefore they do not need grounding.

Protected zones

DIN VDE 0100-701

DIN VDE 0100-701 assigns protected zones to showers and bathrooms.

- **Protected zone 0**
  No electrical installation devices must be installed.

- **Protected zone 1**
  Junction and connection sockets for electric circuits of permissible, firmly attached and firmly connected consumers may be installed. These are water heaters, whirlpools and wastewater pumps.

- **Protected zone 2**
  All electrical consumers may be installed.

Extractor fan

Depending on the type single room de-aeration fans are permissible to be installed in the protected zones 1 and 2. For detailed information on the protection and arrangement, please refer to the product information of the manufacturers.

Sockets

Sockets may be installed only outside of the protected zones 0 to 2 as they are no consumers.

Protected zones for shower and bathrooms
DIN VDE 0100-701

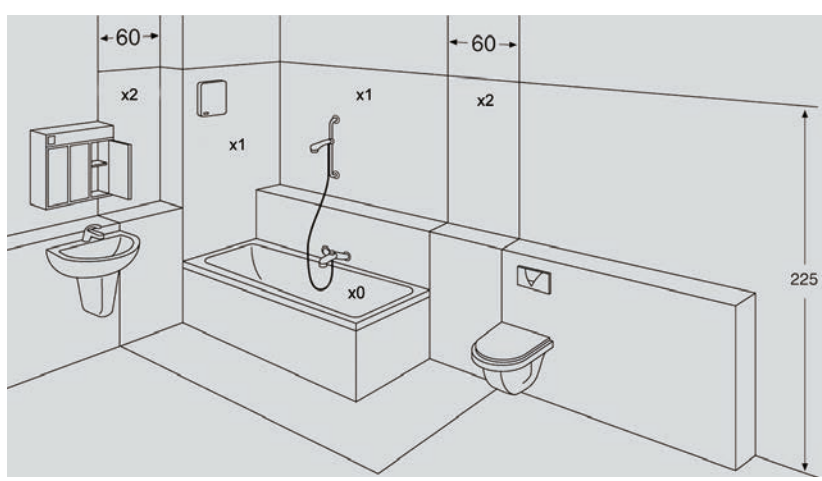

Fig. 2 – 10 Sanitary area – protected zones

Pre-wall installation vs. wall slot
Subsequently produced slots and recesses will weaken statically loaded walls in their cross section and thus in their load-bearing capacity. If the reductions in the cross-section of the wall still fulfil the requirements of DIN 1053 sheet 1, they are permissible from the viewpoint of the structural analysis.
If the requirements for sound protection according to DIN 4109 are considered, it is however no longer possible for the installer to accommodate insulated pipelines in chiselled slots. This is possible for slots in masonry with limitations only.

DIN 1053 sheet 1
»Masonry – Design and construction«

Sound protection DIN 4109

Installation in the pre-wall
The solution to the problem, especially in the refurbishment of old buildings, is the pre-wall installation. If the customer persists that the pipeline is routed in the brickwork, VOB-B stipulates that he shall assume the responsibility. Such requirements should always be documented and countersigned by the customer.
Even if the wording of DIN 1053-1 refers to load-bearing inner walls only, the above limitations also apply to non-load-bearing inner walls.

Note
Further information can be obtained from ZVSHK:
»Leaflet and specialist information sound protection«

Product group

2

T 2

System descriptions

Steptec

Steptec allows establishing quick pre-wall installations with few components.

The system includes:
- Mounting rail
- Connectors
- Modules
- Steptec punch

Calculation of material quantities

The required rail length and the suitable Steptec complete package with everything required for connecting and fixing the mounting rails is calculated from the width and height of the pre-wall surface area. Select the modules – and the calculation of the material quantities is ready.

Benefits

- Reduced stock keeping
- Quick mounting
- Universal connector for 45° and 90° joints with threaded drill hole M 10 for pipe suspensions
- Mounting rail open on one side and punched for wall mounting
- Suitable for cladding with Obtego panels

Fig. 2 – 11 Steptec support profile

Steptec punch
Combination tool that can be used as scissors/punch for Steptec rails.

Shortening and punching holes

Actuation with hand lever – faster and more precise than an angle grinder. The profile can be punched at any place.

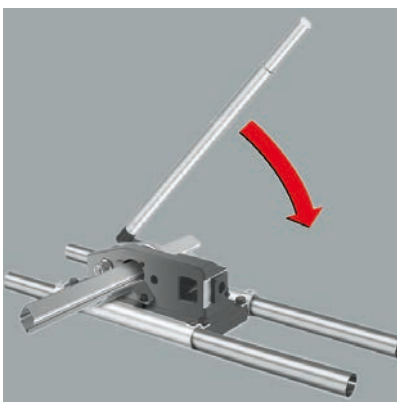

Fig. 2 – 12 Steptec punch

Steptec punch
Of powder-coated steel, in the plastic case

Mounting options
- In the workshop: Screwed on the workbench
- On the site: On the floor with two inserted-through pipes, with 1-inch stainless steel pipes or 35-mm-copper pipes.

Modules
The modular design allows equipment with washbasin, WC, bidet or urinal modules, mounted with slot nuts at the open side of the rail.

WC module

Fig. 2 – 13 Steptec WC module

Washbasin module

Fig. 2 – 14 Steptec WB module

Advantages of WC module

- Depth-adjustable drain elbow
- Sanitary object fixings adjustable for barrier-free WC use
- Water path including wall lead-in pre-assembled
- Dual flush technology
- Lowest construction height 840 mm
- All flush plates of the Visign series fit

Steptec connectors for mounting rails

The connector is designed in a way that it claws into the mounting rail when the Allen screw is tightened. That way all arising tensile and compressive forces of the sanitary installation are accommodated.

Steptec connector

Fig. 2 – 15 Steptec 90° connection

Tolerance up to 10 mm when shortening the mounting rail – stability is not impaired.

Fig. 2 – 16 Steptec 45° connection

Suitable for 45° corner installations.

Steptec joint

Fig. 2 – 17

Two mounting rails can be connected at any angle – e.g. roof constructions.

Integrated nut M10 on the face side for pipe suspensions.

Fig. 2 – 18

Pre-wall installation depths < 145 mm are mounted using the Steptec parallel connector.

Mounting the Steptec connector

Steptec connectors are used to connect Steptec rails with each other at the angle of 45° or 90° degrees. If correctly assembled, a stable connection is established in a few assembly steps.

Steptec connectors can be installed on the open and closed sides of the Steptec rail. The blocking elements of yellow plastic available on each Steptec connector are used for mounting on the open rail side.
They prevent that the mounting rail is compressed at the fixing point when the fixing screw is tightened. Before mounting Steptec connectors on the closed sides of the rail, it is necessary to remove the unnecessary blocking elements.

Mounting on the open side of the rail

Place the Steptec connector with blocking element on the open rail side. The blocking elements are factory-pre-assembled on the short sides of the Steptec connector. If the long side of the connector is to be mounted on the open side of the rail, a blocking element is relocated from the short side on the long side.

Install the blocking elements on the open rail sides!

Connector on the open side of the rail

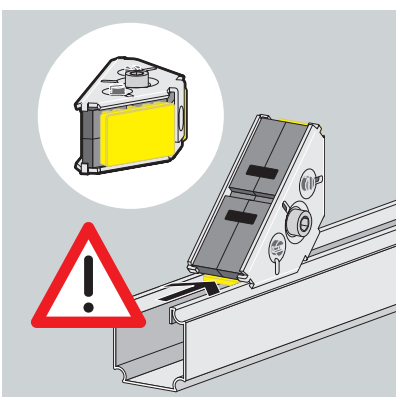

Fig. 2 – 19 Steptec connector – open side

The short side of a Steptec connector on an open rail side.

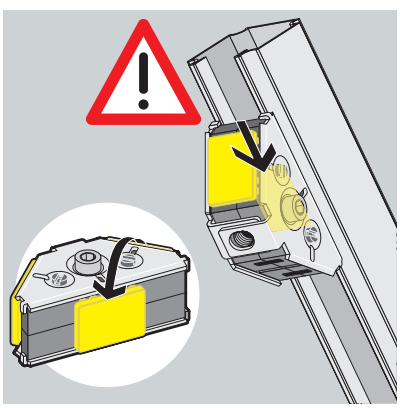

Fig. 2 – 20 Steptec connector – open side

The long side of the Steptec connector on an open rail side – a blocking element is relocated from the short side to the long side.

Connector on the closed side of the rail

Mounting on the closed side of the rail

For mounting Steptec connectors on the closed rail sides no blocking elements are necessary and can be disposed of.

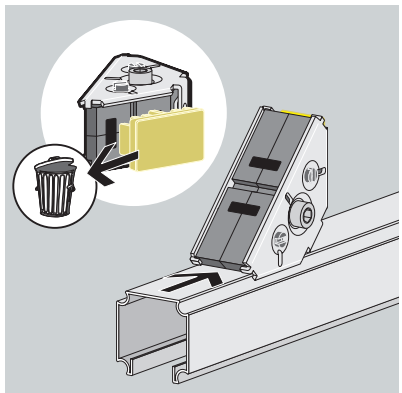

Fig. 2 – 21 Steptec connector mounting 1

The short side of a Steptec connector on a closed rail side.

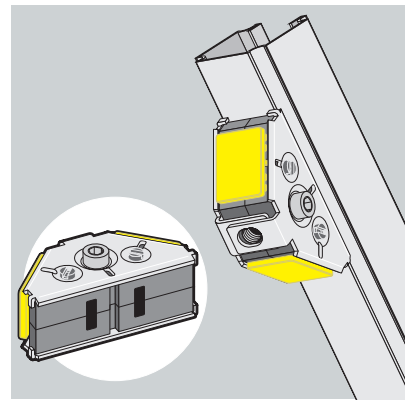

Fig. 2 – 22 Steptec connector mounting 2

The long side of a Steptec connector on a closed rail side – dispose of blocking elements.

Obtego cladding panel

Obtego cladding panels from Murodesign GmbH are the alternative of IFGP cladding panels. The robust plastic panels are available in over 200 decors and delivered custom-fit. Mounting is by simply clipping them on the Steptec rails open to the front.

Features

- Immediately ready wall surface – without tiling work
- Quickly replaceable
- Permanent accessibility of the installation
- Material
  - Plastic 11 mm, foamed PVC – weight approx. 8 kg/m²
  - Waterproof, rot-proof
  - High compressive strength
  - Fire rating class B 2

Calculation of required material quantities

Calculation in two steps

Basis for the calculation of the required material quantities is the surface area of the pre-wall in m^2

- The rail lengths can be calculated from the area multiplied with the rail factor 5.5.
- The fixing material is made available in complete packages for pre-wall surface areas of 1, 3, 5 and 10 m^2 which can be combined.

Contents of complete packages

The packages include sufficient material quantities for the respective areas

- Connectors
- Screws and dowels Ø 10 mm
- Drywall screws
- Levelling plate

Benefits

The calculation of the required material quantities on the basis of m^2 offers the following advantages:

- Quick calculation
- Easy mounting
- Clear ordering of material without using IT
- Supports pre-fabrication in the workshop
- Reduced stock keeping

Calculation example 1

Given: Pre-wall area to the covered with panels 3 m^2

Step 1 Select the fixing material:
3 m^2 complete package

Step 2 Calculate the rail length: 3 m^2 x 5.5 (rail factor) = 16.5 m
4 mounting rails each of 5 m = 20 m

Step 3 Select the modules for the sanitary object to be installed.

Calculation example 2

Given: Area to be covered with panels = 2.7 m^2 with WC and washbasin

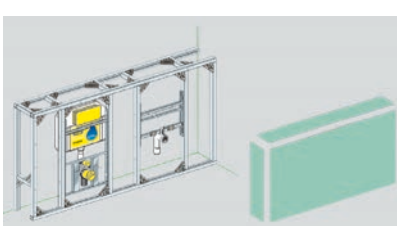

Fig. 2 – 23 Example 2 – material quantities

Required material quantities

- 1 complete package for 3 m^2
- 3x mounting rail each of 5 m (2.7 m^2 x 5.5 = 14.85 m)
- 1 WC and 1 WB module

Example 2

Semi-high pre-wall connected on one side, with WC and washbasin module

Calculation example 3

Example 2

Shaft connected on one side, pre-wall with WC and WB module

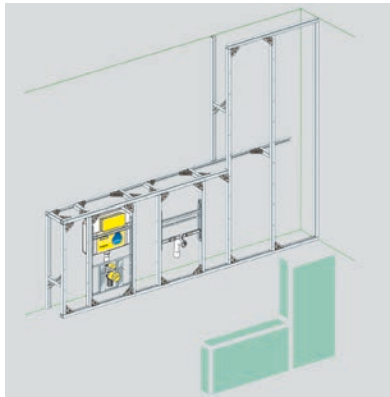

Fig. 2 – 24 Example 3 – material quantities

Given:
Area to be covered with panels = 5.5 m^2 with WC and washbasin

Required material quantities

- 1 complete package for 5 m^2 + 1 complete package for 1 m^2
- 7x mounting rail each of 5 m (5.5 m^2 x 5.5 = 30.25 m)
- 1 WC and 1 WB module

Assembly

General assembly rules

- Use only 12.5 mm IFGP or 12 mm Aqua-CS cladding panels for cladding.
- Make joints 3 mm wide and fill with suitable filler – consumption approx. 300 g/m^2.
- Prepare support profile with gauges for bore hole 500 mm.
- Align the mounting rails with the aid of the pre-punched slotted holes.
- Place shim plates under unsupported mounting rails on crude soils.
- Mount additional wall supports at fixing points for modules in the support profile.
- Reinforce room-high partitions in the upper and lower third with rails from Steptec, Rigips or Fermacell.
- Room partitions wider than 240 mm can be mounted without heavy-duty feet.

Note

- Barrier-free applications are possible without any limits.
- The declaration of compliance for the installation shaft must observed for fire protection.
- Steptec is sound-protection tested according to DIN 4109 and fulfils the stricter requirements in VDI 4100.

Pre-wall mounting

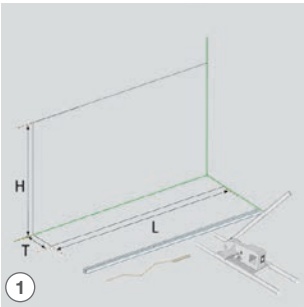

Fig. 2 – 25

Shorten floor and wall rails with the Steptec punch.

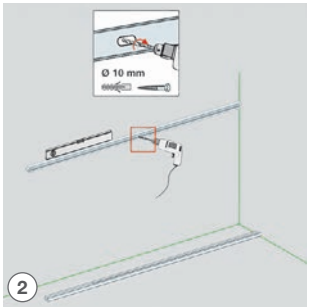

Fig. 2 – 26

Mount wall and floor rails with the fixing material of the complete package immediately on the installation body.

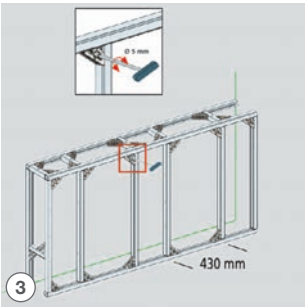

Fig. 2 – 27

Use Steptec connectors to screw the rail elements to each other.

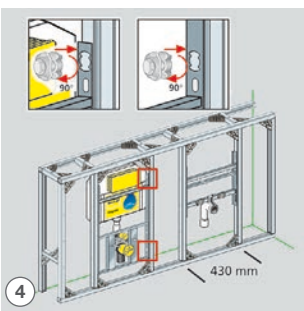

Fig. 2 – 28

Fix the Steptec modules on the open rail sides using the slot nuts.

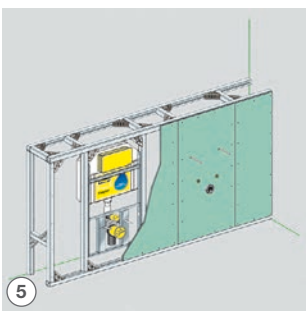

Fig. 2 – 29

Fix cladding with self-drilling screws on the mounting rails.

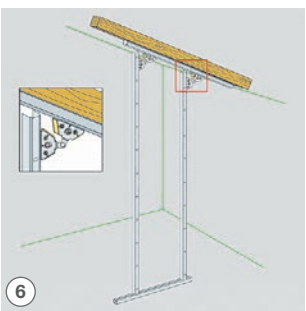

Fig. 2 – 30

Use Steptec joints to implement individual angles in pitched roof areas.

Installation dimensions – half-height pre-wall

Minimum installation depths X [mm], half-height pre-wall – measurements in mm

		Collecting pipe without insulation			Standard pre-wall height
Steptec module	**Art. No.**	**DN 50**	**DN 90**	**DN 100**	
WC module – act. from front	656 102	–	145	170	1130
WC module – act. from front	700 010	–	170	170	
WC module – act. from front	656 119	–	145	170	980
WC module – act. from front/top	718 954	–	200		840
Bidet module	656 140	145		170	1130
WB module	562 618				
WB module	576 998				
WB module – for concealed odour trap	655 976				
WB module – with concealed connection box	734 824				
Sink basin module	655 969				
Urinal module wall-mounted flushing system	655 983				
Urinal module concealed flushing system	656 058				
Urinal module siphon sensor technology	735 722				
Fitting holder – e.g. kitchen sink	656 072				
Fitting holder – reinforced	461 836				
Fitting holder – adjustable width	297 770				
Wall-mounted fitting holder	656 089				
Concealed fitting holder	297 787				
Fitting holder – washing machine	656 096				
Concealed fitting holder	741 198				
Concealed fitting holder – adjustable depth	745 080				

Table 2 – 2

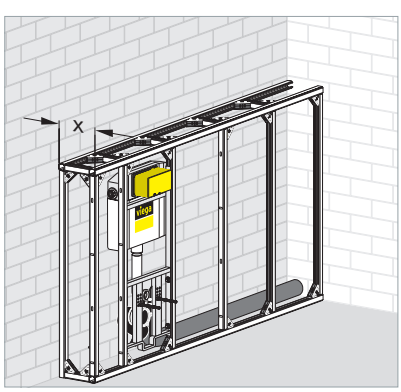

Fig. 2 – 31 Half-height pre-wall

Installation dimensions – half-height partition

Minimum installation depths X [mm], half-height partition – room partition, cladded on one side, H_{max} = 1500 mm

		Collecting pipe without insulation			Standard pre-wall height
Steptec module	**Art. No.**	**DN 50**	**DN 90**	**DN 100**	**[mm]**
WC module – act. from front	656 102	–	240		1130
WC module – act. from front	700 010				
WC module – act. from front	656 119				980
WC module – act. from front/top	718954				840
Bidet module	656 140	240			1130
WB module	562 618				
WB module	576 998				
WB module – for concealed odour trap	655 976				
WB module – with concealed connection box	734 824				
Sink basin module	655 969				
Urinal module wall-mounted flushing system	655 983				
Urinal module concealed flushing system	656 058				
Urinal module siphon sensor technology	735 722				
Fitting holder – e.g. kitchen sink	656 072				
Fitting holder – reinforced	461 836				
Fitting holder – adjustable width	297 770				
Wall-mounted fitting holder	656 089				
Concealed fitting holder	297 787				
Concealed fitting holder	741 198				
Concealed fitting holder – adjustable depth	745 080				

Table 2 – 3

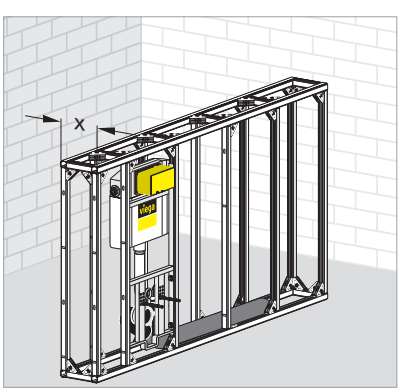

Fig. 2 – 32 Half-height partition

Installation dimensions – room-height partition

Minimum installation depths X [mm], room-height partition – fastened on one side, cladded on one side

		Collecting pipe without insulation		
Steptec module	**Art. No.**	**DN 50**	**DN 90**	**DN 100**
WC module – act. from front	656 102	–	210	
WC module – act. from front	700 010			
WC module – act. from front	718 954			
Bidet module	656 140	145	185	210
WB module	562 618			
WB module	576 998			
WB module – for concealed odour trap	655 976			
WB module – with concealed connection box	734 824			
Sink basin module	655 969			
Urinal module wall-mounted flushing system	655 983			
Urinal module concealed flushing system	656 058			
Urinal module siphon sensor technology	735 722			
Fitting holder – e.g. kitchen sink	656 072			
Fitting holder – reinforced	461 836			
Fitting holder – adjustable width	297 770			
Wall-mounted fitting holder	656 089			
Concealed fitting holder	297 787			
Fitting holder – washing machine	656 096			
Concealed fitting holder	741 198			
Concealed fitting holder – adjustable depth	745 080			

Table 2 – 4

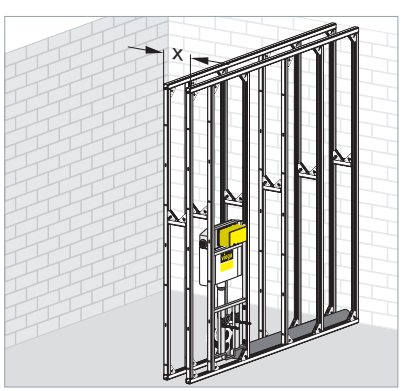

Fig. 2 – 33 Room-height partition 1

Installation dimensions – room-height partition

Minimum installation depths X [mm], room-height partition – fastened on both sides, cladded on one side

		Collecting pipe without insulation		
Steptec module	**Art. No.**	**DN 50**	**DN 90**	**DN 100**
WC module – act. from front	656 102	–	185	210
WC module – act. from front	700 010			
WC module – act. from front	656 119			
Bidet module	656 140	145		
WB module	562 618			
WB module	576 998			
WB module – for concealed odour trap	655 976			
WB module – with concealed connection box	734 824			
Sink basin module	655 969			
Urinal module wall-mounted flushing system	655 983			
Urinal module concealed flushing system	656 058			
Urinal module siphon sensor technology	735 722			
Fitting holder – e.g. kitchen sink	656 072			
Fitting holder – reinforced	461 836			
Fitting holder – adjustable width	297 770			
Wall-mounted fitting holder	656 089			
Concealed fitting holder	297 787			
Fitting holder – washing machine	656 096			
Concealed fitting holder	741 198			
Concealed fitting holder – adjustable depth	745 080			

Table 2 – 5

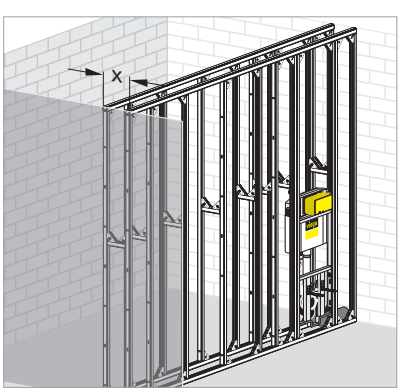

Fig. 2 – 34 Room-height partition 2

Installation dimensions – half-height partition

Minimum installation depths X [mm], half-height partition – room partition, cladded on both sides, collecting pipe DN 100, without insulation

Steptec module	Art. No.	WC module (act. from front) art. no. 656 102	WC module (act. from front/top) art. no. 718 954	Bidet module art. no. 656 140	WB module art. no. 562 618	WB module with concealed connection box art. no. 734 824	Urinal module concealed flushing system art. no. 656 058	Urinal module siphon sensor technology art. no. 735 722	Wall-mounted fitting holder art. no. 656 089	Concealed fitting holder art. no. 297 787
WC module – act. from front	656 102	330[1]		280					240	240
WC module – act. from front/top	718 954		400	330						270
Bidet module	656 140	280	330	240						
WB module	562 618									
WB module – with concealed connection box	734 824									
Urinal module concealed flushing system	656 058									
Urinal module siphon sensor technology	735 722									
Wall-mounted fitting holder	656 089	240	240							
Concealed fitting holder	297 787		270							
Concealed fitting holder	741 198									
Concealed fitting holder – adjustable depth	745 080									

Table 2 – 6

[1] with WC double elbow

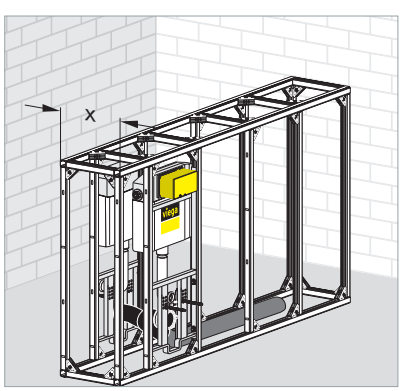

Fig. 2 – 35 Half-height partition

Installation dimensions – room-height partition

Minimum installation depths X [mm], room-height partition – cladded on both sides, collecting pipe DN 100, without insulation

Steptec module	Art. No.	WC module (act. from front) art. no. 656 102	Bidet module art. no. 656 140	WB module art. no. 562 618	WB module (with concealed connection box) art. no. 734 824	Urinal module concealed flushing system art. no. 656 058	Urinal module siphon sensor technology art. no. 735 722	Wall-mounted fitting holder art. no. 656 089	Concealed fitting holder art. no. 297 787	Concealed fitting holder art. no. 741 198	Concealed fitting holder (depth-adjustable) art. no. 745 080
WC module – act. from front	656 102	330[1]	280					220	240		
Bidet module	656 140	280	220					165	180		
WB module	562 618										
Urinal module concealed flushing system	656 058										
Urinal module siphon sensor technology	735 722										
WB module – with concealed connection box	734 824										
Wall-mounted fitting holder	656 089	220	165					165			
Concealed fitting holder	297 787	240	180								
Concealed fitting holder	741 198										
Concealed fitting holder – adjustable depth	745 080										

Table 2 – 7

[1] with WC double elbow

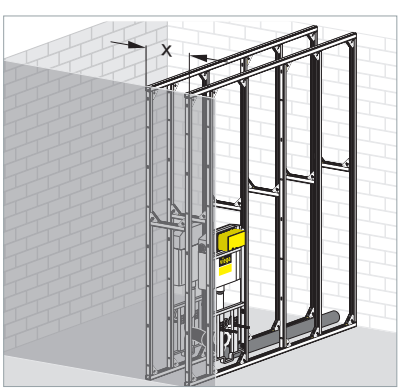

Fig. 2 – 36 Room-height partition

Assembly times

Assembly times – Steptec components

Component	Art. No.	[min]
1 m² supporting structure – without cladding		15
1 m² cladding – incl. filling		25
Additional module for cladding		10
WC module, 1130 / 980	656 102 656 119	10
WC module, 1130	700 010	10
WC module, 840	718 954	10
Bidet module	656 140	6
WB module	562 618	6
WB module	655 976	10
WB module	734 824	6
Sink basin module	655 969	15
Urinal module	655 983	9
Urinal module	656 058	9
Urinal module	397 142	9
Urinal module – Joly and Visit	656 065	10
Urinal module – siphon sensor technology	735 722	12
Fitting holders	656 072	5
Fitting holder – reinforced	461 836	5
Fitting holders	656 089	5
Fitting holders	297 770	5
Fitting holders	297 787	5
Fitting holders	331 887	5
Fitting holders	656 096	5
Concealed fitting holder – adjustable depth	745 080	5
Concealed fitting holder	741 198	**5**
Fixing element	295 295	**5**
Fixing element	331 900	5
Fixing rail	331 849	5
Uni bracket	331 863	5
Plywood board	285 319	5

Table 2 – 8

Example

Assembly times – 5 m² supporting structure with WC and WB module

Component	Art. No.	[min]
Supporting structure – with Steptec rail punch		75
WC module	656 102	10
WB module	562 618	6
Pre-wall		91
Cladding incl. filling		125
Additional cladding of modules		20
	Total	**236**

Table 2 – 9

Viega Eco / Eco Plus

Product group

T 3

Viega Eco Plus is the pre-wall system for object business with an optimal price-performance ratio. The product line is tuned to the width of 490 mm and allows fixing the handholds at the plywood boards in line with the standards.

Benefits

- Connection elbow 90° depth-adjustable
- WC barrier-free
- Integrated alignment help
- Strong wall-mounted fitting holder
- Noise-tested
- Quick mounting
- Great stability
- Easy corner mounting

Installation in an on-site support profile should be performed in consultation with the drywall builder.

Fig. 2 – 37 Viega Eco Plus elements

WC element model 8180.26

- Concealed cistern Standard 2 with dual flush technology – setting range full-flush volume approx. 6–9 l
- Pre-assembled water connection
- Factory setting: Full-flush volume approx. 6 l, partial flush volume 3 l
- Can be combined with standard flush plate and flush plates of the design lines Visign for Public 1 and Visign for Style 10, 13, 14
- Convertible to flush plates Visign for Style 11, 12 and Visign for More by conversion kit model 8310.0
- Frame of steel, powder-coated
- Connection elbow DN 90 (depth-adjustable) of PP and eccentric adapter DN 90/100 of PP

Viega Eco WC element

Model 8180.26 with flush plates

Fig. 2 – 38 Flush plates – options for WC element model 8180.26

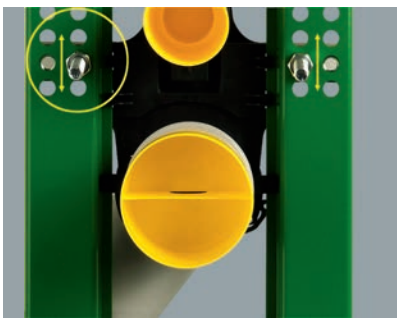

Fig. 2 – 39 Sanitary object fixing

Element individually adjustable and can be set to the height accessible for disabled people

Fig. 2 – 40 Floor supports

Floor supports of 50 or 75 mm support profile – adaptable, quick alignment

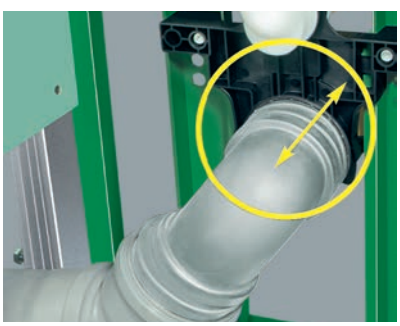

Fig. 2 – 43 Depth adjustment

Drainpipe depth-adjustable up to 40 mm

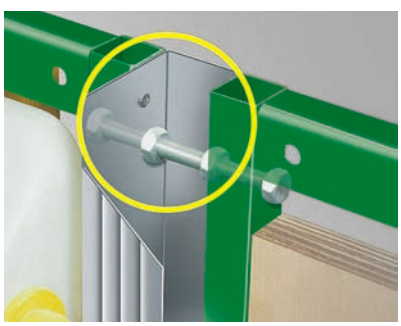

Fig. 2 – 44 Element fastener

Element fixing in the support profile

Fig. 2 – 41 Corner mounting

Corner mounting – on the mounting rail or on the wall directly

Fig. 2 – 42 Alignment help

Alignment help for simplified height adjustment

Elements

Viega Eco Plus are pre-wall elements for assembly in support profiles installed on site.

WC elements

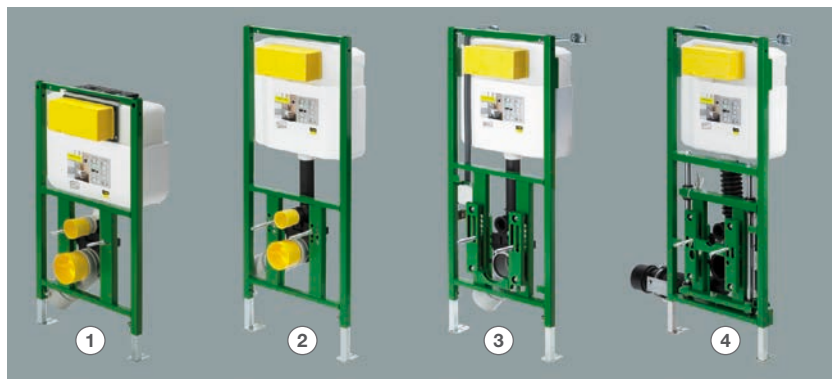

Fig. 2 – 45 Viega Eco Plus – pre-wall elements

1. WC element, actuation from front/top CH 830 mm
2. WC element, actuation at the front CH 1130 mm
3. Universal shower WC element, actuation at the front CH 1130 mm
4. WC element, individually height-adjustable, actuation at the front CH 1130 mm

For the potable water installation, the elements are equipped with fixings with acoustic insulation. A large range of WB elements covers all common building requirements. The elements can be equipped for barrier-free applications and for fittings common in hospitals.

Washbasin elements

Fig. 2 – 46 Viega Eco Plus – washbasin elements

1. WB element for concealed odour trap CH 1130 mm
2. WB element with concealed connection box CH 1130 mm
3. WB element CH 1130 mm
4. WB element individually height-adjustable CH 1130 mm

Viega Eco Plus elements – overview

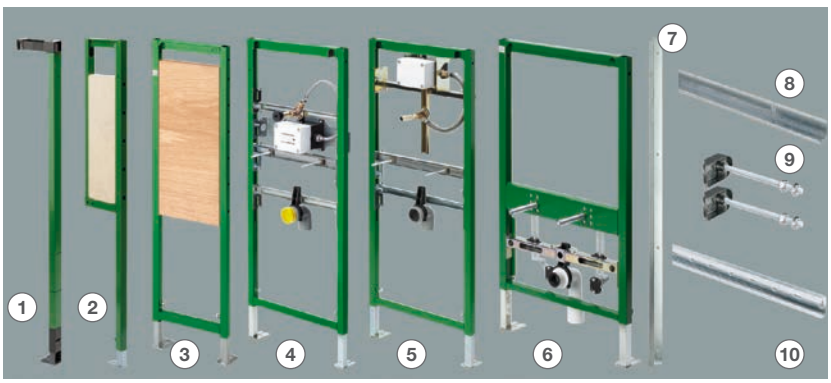

Fig. 2 – 47 Viega Eco Plus – overview

1. Support bracket, CH 830–1130 mm
2. Fixing element CH 1130 mm
3. Fixing element CH 1130 mm
4. Urinal element with siphon sensor technology CH 1130 mm
5. Urinal element CH 1130 mm
6. Bidet element CH 1130 mm
7. Mounting profile 45°
8. Wall connection profile
9. Fixing set
10. Mounting rail

Mounting

Viega Eco Plus elements in on-site support profile.

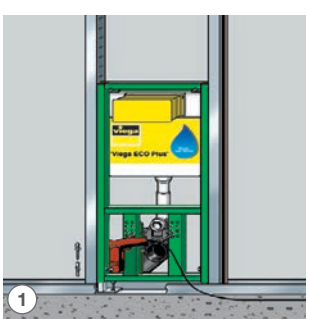

Fig. 2 – 48

Fix through the open mounting rail with self cutting screws.

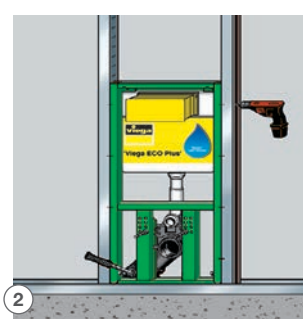

Fig. 2 – 49

Mount the elements in the upper drill hole with threaded rods and nuts.

Fig. 2 – 50

Clad support profile with 2 x 12.5 mm gypsum plaster boards.

Viega Eco Plus corner elements

Viega Eco Plus corner elements can be installed space-saving in corners of the room. The corner elements offer multiple fixing options and can thus be mounted even in unfavourable installation situations.

Features

- Mounting even possible in corners ≠ 90°
- Variable routing of drainpipe in the area of the standing bases
- Single-side mounting possible with fixing on one side
- Two corner elements can be combined
- Flush volume adjustable to 7.5 l for wastewater pipes with narrower cross sections

Overview of corner elements

Fig. 2 – 51 Model 8141.2

Viega Eco Plus WC corner element
CH 1130 mm and 980 mm

Fig. 2 – 52 Model 8142

Viega Eco Plus WB corner element
CH 980 mm–1300 mm

Fig. 2 – 53 Model 8143

Viega Eco Plus bidet corner element
CH 980 mm–1130 mm

Fig. 2 – 54 Model 8144

Viega Eco Plus urinal corner element,
CH 1130 mm or 1300 mm

Viega Eco Plus floor-standing WC element

Model 8161.15 / art. no. 705 831 for floor-standing WCs and special ceramics for children

Technical data

- Construction height 1130 mm
- Actuation from front
- Dual flush technology
- Partial flush volume – factory-set to approx. 3 l
- Partial flush volume – setting range approx. 3–4 l
- Full-flush volume – factory-set to approx. 6 l
- Full-flush volume – setting range approx. 6–9 l

Fig. 2 – 55 Viega Eco Plus – floor-standing WC element

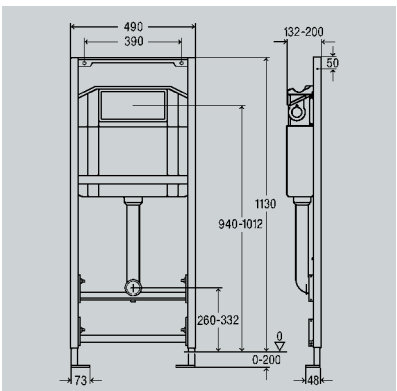

Fig. 2 – 56 Installation dimensions

WC element will 4.5 litres full-flush volume
Viega WC elements with the preset full-flush volume of 4.5 l and the partial flush volume of approx. 3 l can be delivered for particularly water-saving WC ceramics. All Viega concealed cistern models can also be converted subsequently.

Fig. 2 – 57 Viega Eco Plus – WC element

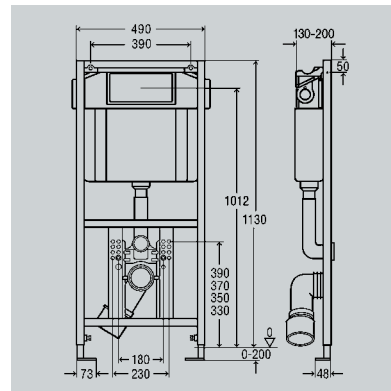

Fig. 2 – 58 Installation dimensions

Technical data

- Partial flush volume – factory-set to approx. 3 l
- Partial flush volume – setting range approx. 2.5–3 l
- Full-flush volume – factory-set to approx. 4.5 l
- Full-flush volume – setting range approx. 4.5–6 l

Overview of WC elements

- **Viega Eco Plus WC element** – Model 8161.45
  art. no. 686154, construction height 1130 mm, actuation from front

- **Viega Eco Plus WC element** – Model 8130.45
  art. no. 718992, construction height 830 mm, actuation from front/top

Overview of conversion kits

The following Viega concealed cisterns can be converted to the full-flush volume 4.5 l and partial flush volume 3 l:

- **Viega concealed cistern 2H**
  conversion kit: Model 8000.45/art. no. 685027
- **Viega concealed cistern 2L**
  conversion kit:Model 8038.45/art. no. 685034

Installation dimensions – construction heights/installation depths

Installation depth [mm] without cladding and wall tile (see Fig. 2 – 59)

Minimum installation depths X [mm], half-height pre-wall – without profile of support profile

		Collecting pipe without insulation			Minimum pre-wall height
Viega Eco Plus element	**Art. No.**	**DN 50**	**DN 90**	**DN 100**	**[mm]**
WC element – actuation at the front	606 664		135	160	1130
WC element – actuation at the front – height-adjustable	700 652		160		
WC element – actuation at the front	704 070		135	160	980
Universal shower WC element	736 859		160		1130
WC element – actuation at the front/top	718 336		200		830
WB element	641 023				1130
WB element	704 087		135	160	980
WB element	613 297	100 (75)[1]			860
WB element – for wall-mounted fitting	461 782				1300
WB element – for concealed wall-fitting	668 471		100		1130
WB element – with concealed connection box	734 831	100	100		1130
WB element – individually height-adjustable	736 903	140	140		1130
WB element – barrier-free with wall fitting	461 799				
WB element – barrier-free with single-hole fitting	461 805	90			1130
WB element – barrier-free with single-hole fitting	654 481				860
WB element – with concealed meter	477 462	100			1130
WB element – with concealed meter	576 981				
Sink basin element	461 812	100 (75)[1]	135	160	1300
Urinal element	461 843				1130
Urinal element	611 934	100			1300
Urinal element – with siphon sensor technology	727 918				1130
Bidet element	461 850	100 (75)[1]			
Bidet element	487 645				830

Table 2 – 10

[1] with drain elbow model 8113.21, art. no. 331160

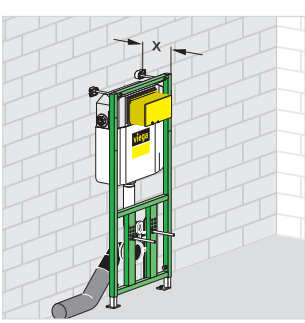

Fig. 2 – 59 Half-height pre-wall

Viega Eco Plus shower WC element universal

Product description

Shower WCs in many variants experience rapid development in the sanitary area. Until now no fixed standards have established for the connection dimensions for the water and electrical connections making the installation or replacement of the WC system often difficult or even impossible.

Fig. 2 – 60 Shower WC

The **Viega Eco Plus Universal shower WC element** creates the preconditions of installing a variety of different shower WCs or tops immediately or later on. All the water and electrical connections are prepared and located behind a glass plate.

An initially mounted standard WC ceramic can be converted later to a shower WC ceramic.

Model 8161.20

Fig. 2 – 61 Universal shower WC element

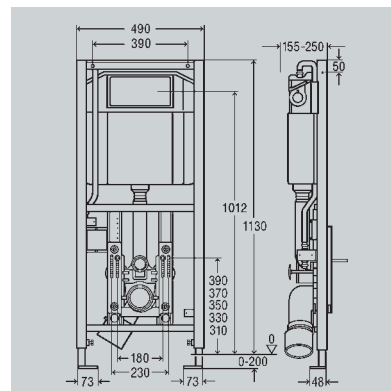

Fig. 2 – 62 Installation dimensions

Concealed cistern 2H equipment

- Dual flush technology
- Flush actuation at front
- Corner valve connection Rp ½, filling valve, drain valve
- WC connection elbow DN 90/eccentric adapter DN 90/100
- Fixing material for pre-wall mounting and standard WC ceramic

Cover plates have to be ordered separately.

The Viega Eco Plus Universal Shower WC Element is variable and creates flexibility for individual planning

Fig. 2 – 63 Shower WC element universal 2

Water connection
Shower WCs of any manufacturer can be connected directly with the flexible hose or retrofitted later.

Power connection
- The shower WC is connected directly to the integrated electrical junction box.
- A socket is mounted within the pre-wall element for the connection of WC tops/electric components with a plug-in connection.

Mounting

Standard WC ceramic
Standard WCs are mounted on a cover plate of single-pane tempered glass which can be ordered separately.

Cover plate standard WC

Shower WC/top
Shower WCs or tops are mounted on cover plates (single-pane tempered glass) which can be ordered separately.

Cover plates shower WC

Viega cover plates – compatibility

Viega cover plate models				
8040.16	**8040.17**	**8040.18**	**8014.19**	**8014.22**
Standard wall-mounted WC	for Geberit AquaClean Sela-WC complete system, Mera-WC complete system, Tuma-WC complete system, Laufen Cleanet Riva shower WC, Duravit Senso-Wash C	Geberit AquaClean 8000/8000 plus Toto Neorest	Geberit AquaClean 4000/5000/5000 plus WC top, Duravit SensoWash E shower WC top, Villeroy & Boch VICLEAN shower WC top, Toto Washlet shower WC top	Toto shower WC Washlet SG

Table 2 – 11

Viega flush plates
All Viega WC flush plates can be used without limitations.

Flush actuation
The shower WC element can be combined with electronic Viega flush actuations (button or radio controlled).

Viega Eco Plus WC element height-adjustable

The user can adjust the seat height individually.

2

Adjustment range

410–490 mm

Fig. 2 – 64 Viega Eco Plus WC elementV

The adjustment of the WC seat height downwards is effected by the weight of the user. The WC ceramic slides down stepless when the adjustment button is pressed and stops as soon as the adjustment button is released.
The unloaded WC can be moved in the top position with the aid of a gas pressure spring – no electrical connection is necessary.
The adjustment range is covered by a glass plate.

Fig. 2 – 65 Viega Eco Plus WC element individually height-adjustable

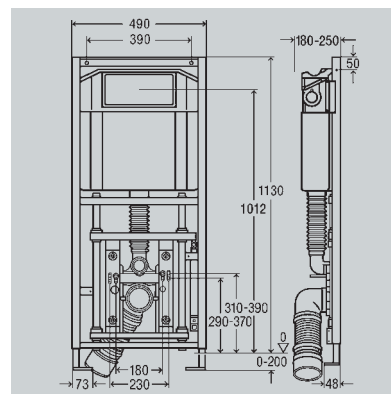

Fig. 2 – 66 Installation dimensions

Concealed cistern 2H equipment

- Dual flush technology
- Flush actuation at front
- Corner valve connection Rp ½, filling valve, drain valve
- WC connection elbow 90°, of PE, flexible, DN 90/100
- Fixing material for pre-wall mounting and standard WC

Cover plates have to be ordered separately.

Fig. 2 – 67 WC seat – height adjustment down

Moving down by the weight.

Fig. 2 – 68 WC seat – height adjustment up

Moving up by spring force.

Technical data/equipment

- **Viega Eco Plus WC element individually height-adjustable**
  - Assembly in all pre-wall, metal or wood-frame constructions
  - Dimensions [mm] 1130 x 490 x 180
  - Fixing distance WC ceramic [mm] 180 (230 on request)
  - Height fixing bolt [mm] 310
  - Adjustment range [mm] 80
  - Adjustable seat height [mm] 410–490

- Glass cover plate – to be ordered separately
  - Dimension [mm] 490 x 560 x 6
  - Design TG clear/light grey
  - With push button for hydraulic actuation

- Pressure spring
  - Downforce [N] 600
  - Lifting force [N] 300

- Wall construction
  - Max. 45 mm – 2 x 12.5 mm plus max. 20 mm tile

- Optional types of actuation
  - Mechanical actuation with dual flush technology
  - Infrared flush actuation automatically after each use
  - Touchless flush plates – Visign for More sensitive with separation of partial and full-flush volume
  - Electronic flush actuations with external radio controlled, button, or light barrier actuation

Adjustment range
700–900 mm

Viega Eco Plus WB element individually height-adjustable

The user can adjust the washbasin height individually in the range between 700 to 900 mm.

Fig. 2 – 69 Viega Eco Plus-WB – height-adjustable

The current position is unlocked for moving down, the washbasin height is re-adjusted manually and the new position is locked again.

Moving up is supported by a gas pressure spring – no electrical connection is required. The adjustment range is covered by a glass plate.

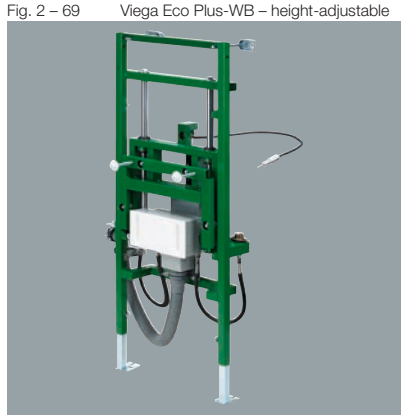

Fig. 2 – 70 Viega Eco Plus washbasin element individually height-adjustable

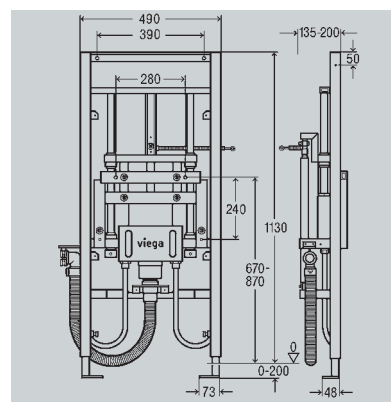

Fig. 2 – 71 Installation dimensions

Features

- Height adjustment – adjustment range 200 mm
- Covered concealed odour trap
- Covered corner valves
- WB wheelchair-compatible
- Provision of all the WB connections
- Suitable for WB faucets with pipe and hose connections – check compatibility with the selected WB model before installation is started.

Fig. 2 – 72

The user unlocks the current position before the adjustment procedure by pressing the actuation button.

Fig. 2 – 73

Moving down is implemented by pressing the washbasin down manually.

Fig. 2 – 74

Moving up is implemented by spring force.

After the adjustment procedure, the user blocks the adjusted position by releasing the actuation button.

Technical data/equipment

- **Viega Eco Plus washbasin element individually height-adjustable**
  - Assembly in all pre-wall, metal or wood-frame constructions
  - Dimensions [mm] 1130 x 490 x 140
  - Concealed connection box
- Glass cover plate – to be ordered separately
  - Dimension [mm] 780 x 720 x 6
  - Design TG clear/light grey
- **Concealed connection box**
  - Odour trap height-adjustable
  - 2x corner valve
  - Drain elbow 300 mm brass chrome-plated
  - Fixing material
- Drain elbow – selection according to the ceramic model
  The distance from the ceramic fixing to the drain hole lower edge determines whether the WB drain elbow has to be mounted with or without an adjusting pipe.

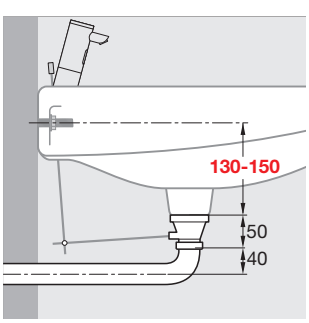

Fig. 2 – 75 Bolt up to ceramic bottom edge 130–150

Required material

Order drain elbow art. no. 743208

Adjusting pipe is not mounted

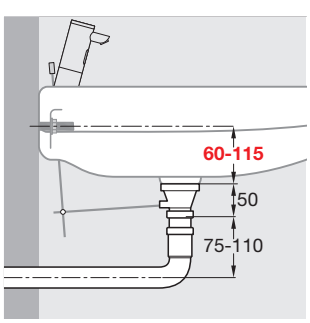

Fig. 2 – 76 Bolt up to ceramic bottom edge 60–115

Required material

Drain elbow/adjusting pipe included in the scope of delivery

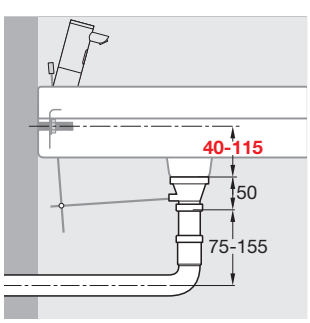

Fig. 2 – 77 Bolt up to ceramic bottom edge 40–115

Required material

Drain elbow included in scope of delivery / Order adjusting pipe art. no. 670856

Barrier-free bathroom

Concealed installation of the WB connections

Viega concealed connection box

Pipe odour trap and corner valves require space. If the visual appearance is disturbing in the design of the bathroom or if the space below the washbasin is required for wheelchair access, it is recommended installing a concealed connection box.

Fig. 2 – 78 Viega concealed connection box – installation

It contains all necessary components for connection of the washbasin and is completely installed in the wall. Only the chrome-plated cover plate is visible.

There are also advantages for mounting. The installation depth of the concealed connection box is variable and can thus be adapted to the wall construction.
The drain is height-adjustable by 20 mm and can be adjusted exactly to the washbasin models.

Fig. 2 – 79 Variants with Viega concealed connection box

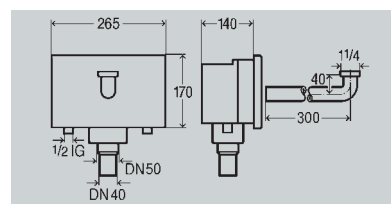

Fig. 2 – 80 Installation dimensions

Features

- WB equipment
  - Corner valves
  - Wastewater pipe DN 40 and DN 50
  - Cable inlet for touchless faucets

- Concealed odour trap extendable, height-adjustable
- Chrome-plated connection pipes for the WB fitting
- Models for Steptec, Viega Eco Plus, Viega Mono
- Chrome-plated plastic cover plate

Installation dimensions – construction heights/installation depths

All dimensions are in referred to the installation wall depths without cladding and tiles.

Minimum installation depths X [mm], half-height pre-wall – without profile of support profile

		Collecting pipe without insulation			Minimum pre-wall height
Viega Eco Plus element	**Art. No.**	**DN 50**	**DN 90**	**DN 100**	**[mm]**
WC element – actuation at the front	606 664		135	160	1130
WC element – actuation at the front – subsequently height-adjustable	700 652		160		
WC element – actuation at the front	704 070		135	160	980
Universal shower WC Element	736 859	–	140		1130
WC element – actuation at the front/top	718 336		200		830
WB element	641 023	100 (75)[1]			1130
WB element	704 087		135	160	980
WB element	613 297				860
WB element – for wall-mounted fitting	461 782				1300
WB element – for concealed wall-fitting	668 471				
WB element – with concealed connection box	734 831	100			
WB element – barrier-free with wall fitting	461 799	90			
WB element – individually height-adjustable	736 903	140			
WB element – barrier-free with single-hole fitting	461 805	90			1130
WB element – barrier-free with single-hole fitting	654 481				860
WB element – with concealed meter	477 462	100			1130
WB element – with concealed meter	576 981				
Sink basin element	461 812	100 (75)[1]			1300
Urinal element	461 843	100			1130
Urinal element	611 934				1300
Urinal element – with siphon sensor technology	727 918				1130
Bidet element	461 850	100 (75)[1]			
Bidet element	487 645				830

Table 2 – 12

[1] with drain elbow model 8113.21, art. no. 331160

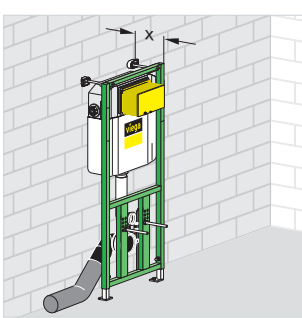

Fig. 2 – 81 Half-height pre-wall

Viega Eco Plus installation dimensions

Minimum installation depths X [mm], room-height pre-wall – in the profile of the support profile 50 mm

		Collecting pipe without insulation		
Viega Eco Plus element	**Art. No.**	**DN 50**	**DN 90**	**DN 100**
WC element – actuation at the front	606 664		155	180
WC element – actuation at the front – subsequently height-adjustable	700 652			
Universal shower WC element, CH 1130	736 859			
WC element – actuation at the front, CH 980	704 070		155	
WC element – actuation at the front/top, CH 830	718 336		200	
WB element – CH 1130	641 023	100	155	180
WB element – CH 980	704 087			
WB element – CH 860	613 297			
WB element – for wall-mounted fitting	461 782			
WB element – for concealed wall-fitting	668 471			
WB element – barrier-free with wall fitting	461 799			
WB element – barrier-free with single-hole fitting, CH 1130	461 805			
WB element – barrier-free with single-hole fitting, CH 860	654 481			
WB element – with concealed meter	477 462			
WB element – with concealed meter	576 981			
WB element – individually height-adjustable, CH 1130	736 903		140	
Sink basin element	461 812		155	
WB element – with concealed connection box, CH 1130	734 831			
Urinal element – CH 1130	461 843			
Urinal element – CH 1300	611 934			
Urinal element – with siphon sensor technology	727 918			
Bidet element – CH 1130	727 901			
Bidet element – CH 830	736 958			

Table 2 – 13

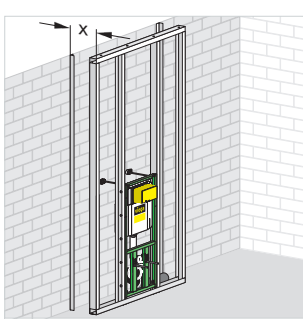

Fig. 2 – 82 Room-height pre-wall

Viega Eco Plus installation dimensions

Minimum installation depths X [mm], room-height partition – in the profile of the support profile 50 mm one-side cladding, without insulation

		Collecting pipe without insulation		
Viega Eco Plus element	**Art. No.**	**DN 50**	**DN 90**	**DN 100**
WC element – actuation at the front	606 664	–	205	230
WC element – actuation at the front – subsequently height-adjustable	700 652			
WC element – actuation at the front	704 070			
WC element – actuation at the front/top	718 336			
Universal shower WC element – CH 1130	736 859			
WB element	641 023	155		
WB element	704 087			
WB element	613 297			
WB element – for wall-mounted fitting	461 782			
WB element – for concealed wall-fitting	668 471			
WB element – with concealed connection box, CH 1130	734 831			
WB element – barrier-free with wall fitting	461 799			
WB element – individually height-adjustable, CH 1130	736 903			
WB element – barrier-free with single-hole fitting	461 805			
WB element – barrier-free with single-hole fitting	654 481			
WB element – with concealed meter	477 462			
WB element – with concealed meter	576 981			
Sink basin element	461 812			
Urinal element	461 843			
Urinal element	611 934			
Urinal element – with siphon sensor technology	727 918			
Bidet element	727 901			
Bidet element	736 958			

Table 2 – 14

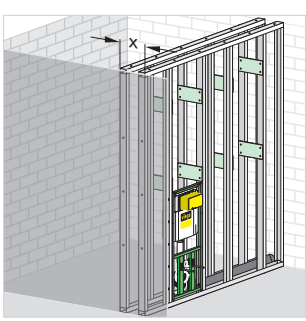

Fig. 2 – 83 Room-height partition

Viega Eco Plus installation dimensions

Minimum installation depths X [mm], room-height partition – in the profile of the support profile 50 mm, dual-side cladding, collecting pipe DN 100, without insulation

Viega Eco Plus element	Art. No.	WC element Actuation front Art. No. 606 664	WB element Art.-No. 641 023	Urinal element Art.-No. 461 843	Bidet element Art.-No. 727 901
WC element Actuation front	606 664	310[1]	230		
WB element	641 023	230	210		
Urinal element	461 843				
Bidet element	727 901				

Table 2 – 15

[1] with WC double elbow

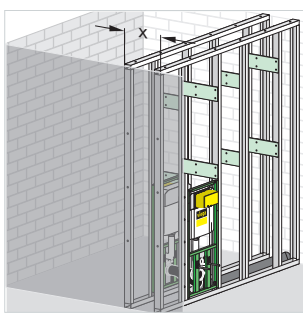

Fig. 2 – 84 Room-height pre-wall

Hygiene flushing function – installation variants

PWH/PWC with flushing station

Water exchange in the potable water pipeline hot (PWH) and in the potable water pipeline cold (PWC) in a series pipeline is ensured by using a flushing station at the end of the installation. In the example the WB element is connected with double wall plates and the concealed cistern with a T-piece. Adjustment options for flushing: oriented towards usage, temperature, or time.

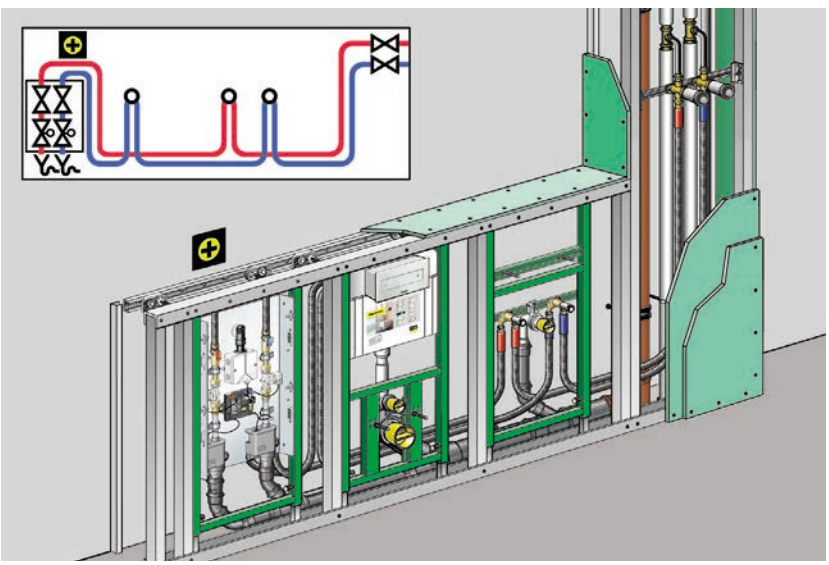

Fig. 2 – 85 PWH/PWC with flushing station

List of materials – hygiene flushing function with flushing station

Quantity	Component	Art. No.
	Installation shaft	
2	Easytop concealed free-flow valve 16 mm	649685
1	Fitting holders	331887
	WB element	
1	Viega Eco Plus washbasin element	641023
1	Viega Eco Plus fixing set	460440
2	Viega Smartpress double wall plate 16/Rp½/16	730413
	WC element	
1	Viega Eco Plus WC element	606664
1	Viega Eco Plus fixing set	460440
1	Visign for Style flush plate	596743
1	Viega Smartpress T-piece 16/Rp½/16	729882

Quantity	Component	Art. No.
	Flushing station	
1	Viega Eco Plus basic element	461751
1	Viega Eco Plus fixing set	460440
1	Flushing station PWH/PWC	708016
2	Viega Smartpress connection screw fitting 16/G½	730208
	On-site performances	
	Viega Smartpress pipe 16 mm	691455
	IFGP cladding panels	576967
	Metal support profile	
	Wastewater pipe	

Table 2 – 16

PWC with Visign for Care flush plate
Water exchange in the potable water pipeline cold (PWC) in a series pipeline is ensured by using a Visign for Care flush plate at the end of the installation. In the example the WB element is connected with a double wall plate.

Operation as intended is implemented by time- and volume-controlled electronics. Setting options: Flush intervals [hours] 1, 12, 24, 72, 168. Possible flush volumes [litres] 3, 4, 5, 6, 7, 9.

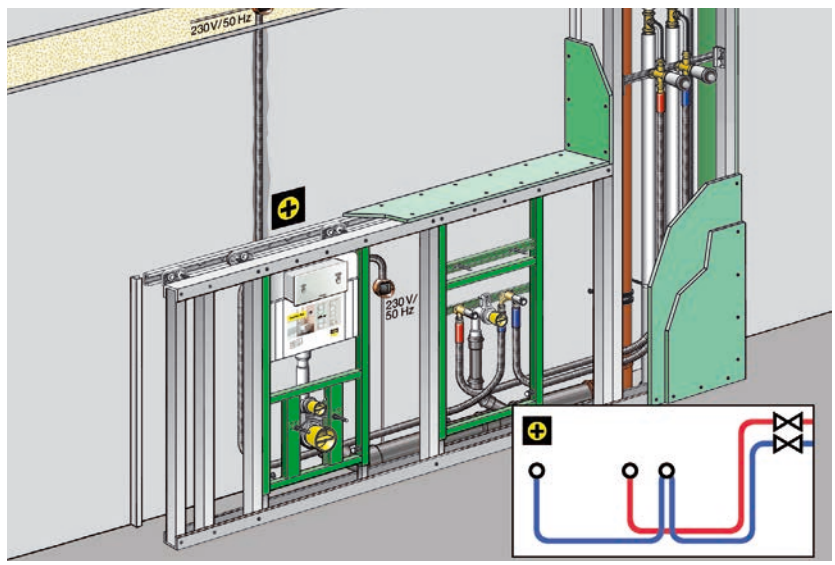

Fig. 2 – 86 Hygiene flushing function with flush plate

List of materials – Hygiene flushing function with Visign for Care flush plate

Quantity	Component	Art. No.
	Installation shaft	
2	Easytop concealed free-flow valve 16 mm	649 685
1	Fitting holders	331 887
	WB element	
1	Viega Eco Plus washbasin element	641 023
1	Viega Eco Plus fixing set	460 440
1	Viega Smartpress double wall plate 16/Rp½/16	730413
1	Viega Smartpress wall plate 16/Rp½	729479

Quantity	Component	Art. No.
	WC element	
1	Viega Eco Plus WC element	606 664
1	Viega Eco Plus fixing set	460 440
1	Visign for Care flush plate	653 828
1	Installation set	655 426
1	Viega Smartpress adapter elbow 90° 16/Rp½	730352
1	Optional for suspended ceiling: Extension cable power pack	628 505
	On-site performances	
	Viega Smartpress pipe 16 mm	691455
	IFGP cladding panels	576 967
	Metal support profile	
	Wastewater pipe	

Table 2 – 17

Viega Mono

Product group

T 4

Benefits

WC/bidet block

The robust Viega mono block for wet construction. The construction height can be adjusted on site by simple shortening.

- Standard block heights: 1130 mm
  Remaining minimum construction height after shortening 980 mm
- Special construction height available: 820 mm (e.g. installation under windows)
- Polystyrene housing as plaster base
- Full-flush volume optionally 6 to 9 l
- Partial flush volume 3 to 4 l
- Standard flush plates and complete Visign series possible
- Standing bracket can be mounted free-standing
- Flush actuation from front or from top
- Protective cap for actuation unit

WC and bidet block

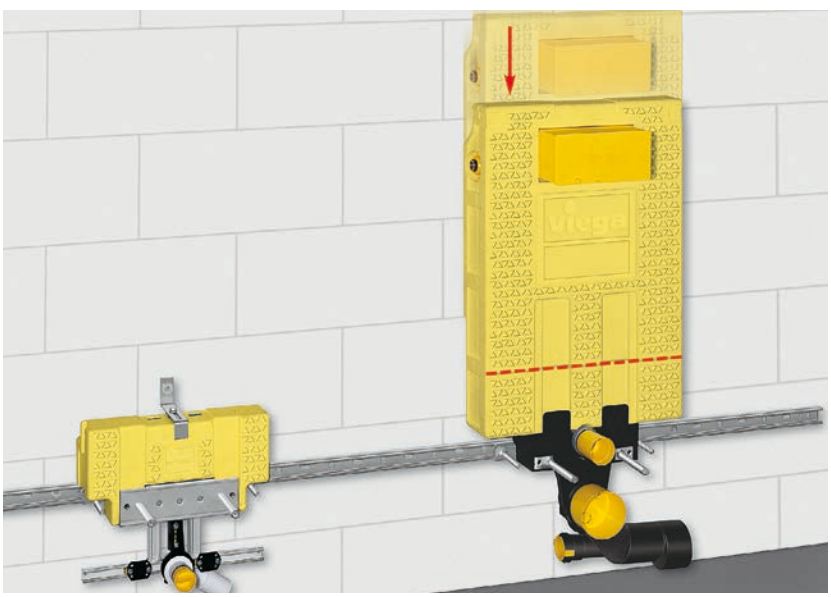

Fig. 2 – 87 Mono blocks – rail mounting

WC block

Actuation
front/top

Fig. 2 – 88 Mono blocks

Assembly

The closed robust casing of the Viega Mono of expanded polystyrene (EPS) makes bricking of the internal area unnecessary. In addition this factory-set sound protection prevents damage and serves as the plaster base. There is the option of line mounting with a continuous mounting rail for WC or bidet installations. Viega mono pre-wall blocks are noise tested by the Fraunhofer Institute for Building Physics, Stuttgart.

Viega Mono WC block concealed

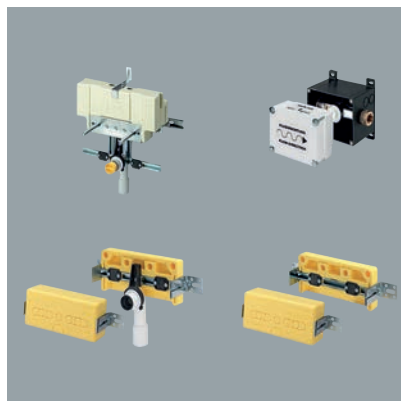

Fig. 2 – 89 Pre-wall block models

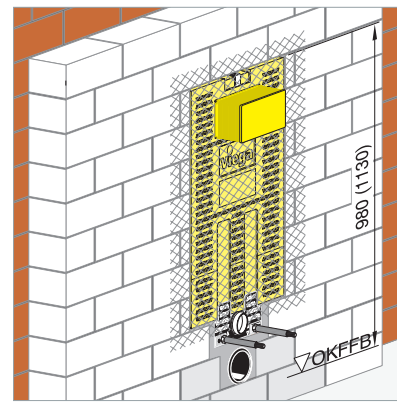

Fig. 2 – 90 Pre-wall block – concealed

To ensure proper functioning of the WC block, it has to be observed when integrating a mono block into a solid wall, that the wall bracket is mounted properly. After bricking, the surface of the pre-wall should be prepared by smooth plastering for tiling. The minimum application thickness on the polystyrene body including tiles should not be less than 15 mm.

Viega concealed cistern 1F – installation depth 80 mm

System description
The Viega concealed cistern 1F with its 80 mm installation depth is of extremely flat design and therefore well suited for mounting in thin wall constructions.
The following design variants are available:

- **Viega Mono Tec**
  - for wet and dry applications
  - for wall-hanged WCs

Catalogue
T4

- **Viega Mono Slim**
  - for wet applications, concealed
  - for floor standing WCs

- **Viega Eco Plus**
  - for dry applications (pre-wall systems)
  - for wall-hanged WCs

Catalogue
T3

All models come with a pre-assembled water path and dual flush technology – optionally for 4.5 or 6 l large flush volume.

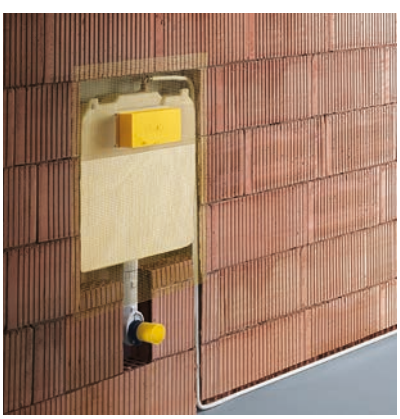

Fig. 2 – 91

Viega Mono Slim
Concealed in a solid wall.

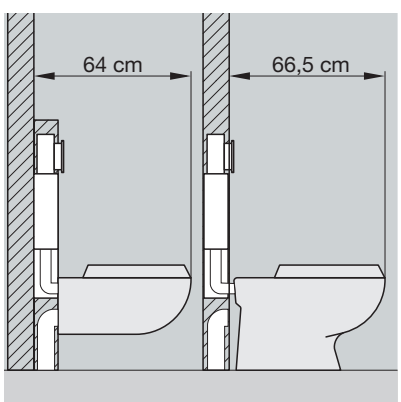

Fig. 2 – 92

Comparison of space requirement
Pre-wall installation/classical installation.

Technical data

Model overview – cisterns 1F

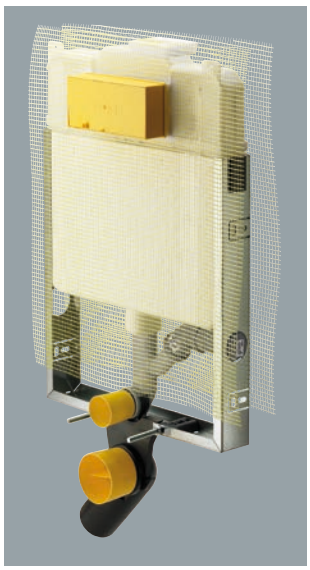

Fig. 2 – 93

Viega Mono Tec WC module

Use

Concealed mounting – wet construction

Thanks to the steel frame particularly suited for wall-hanged WCs and ceramics with large projection

Flush volumes [approx. litres]
Model 8308

Small flush volume	Factory-set	3.0
	Setting range	3.0–4.0
Large flush volume	Factory-set	9.0
	Setting range	6.0–9.0

Model 8309.145

Small flush volume	Factory-set	3.0
	Setting range	2.5–3.0
Large flush volume	Factory-set	4.5
	Setting range	4.5–6.0

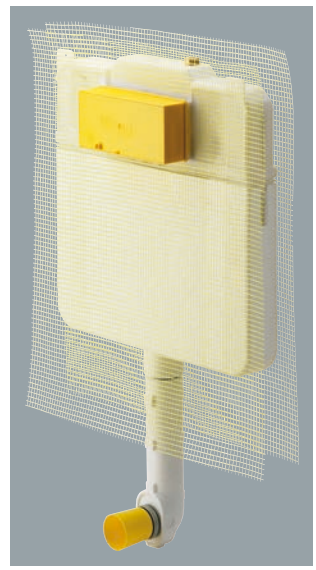

Fig. 2 – 94

Viega Mono Slim concealed cistern 1 F

Use

Concealed mounting – wet construction

For floor standing WCs.

Flush volumes [approx. litres]
Model 8308.1

Small flush volume	Factory-set	3.0
	Setting range	3.0–4.0
Large flush volume	Factory-set	9.0
	Setting range	6.0–9.0

Model 8309.45

Small flush volume	Factory-set	3.0
	Setting range	2.5–3.0
Large flush volume	Factory-set	4.5
	Setting range	4.5–6.0

Fig. 2 – 95

Viega Eco Plus WC element

Use

Assembly in support profile – dry construction

Thanks to the steel frame particularly suited for wall-hanged WCs and ceramics with large projection

Flush volumes [approx. litres]
Model 8108.1

Small flush volume	Factory-set	3.0
	Setting range	3.0–4.0
Large flush volume	Factory-set	6.0
	Setting range	6.0–9.0

Model 8108.45

Small flush volume	Factory-set	3.0
	Setting range	2.5–3.0
Large flush volume	Factory-set	4.5
	Setting range	4.5–6.0

Table 2 – 18

Setting flush volumes

The factory-set small and large flush volumes indicated in **Table 2 – 18** can be adjusted at the drain valve.
Remove the flush plate and remove the drain valve through the revision opening.

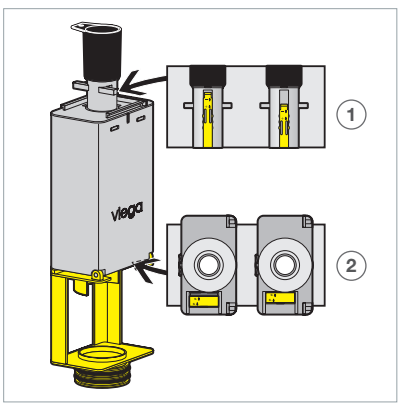

Fig. 2 – 96

The **small flush volume** can be set at three levels.
Draw the slider arranged laterally at the overflow pipe ① on one of the three notches.
In the top position the largest small flush volume is selected, in the bottom one the smallest.

The **large flush volume** is steplessly adjustable.
Draw the slider at the bottom of the overflow pipe ② in the desired position.
In the position of the left the smallest and in position on the right the largest large flush volume is selected.

Flush plates

The following flush plates can be used together with 1F cisterns.

Flush plate – for cistern 1 F

Product name	Model
Standard	8180.1
Visign for Style 10	8315.1
Visign for Style 11	8331.1
Visign for Style 12	8332.1
Visign for Style 13	8333.1
Visign for Style 14	8334.1
Visign for More 100	8352.1
Visign for More 104	8354.1
Visign for More 105	8357.1
Visign for More Care sensitive	8352.21
Visign for Style sensitive	8315.11
Visign for More 100 sensitive	8352.11
Visign for More 105 sensitive	8357.11
Visign for Public 1	8326.1
Visign for Public 2	8327.1
Visign for Public 5	8326.16
Visign for Public 6	8326.15
Visign for Public remote actuation	8326.21
Cover plate	8326.9

Table 2 – 19

WC flushing systems

Concealed cistern 2

Concealed cistern 2 (see Table 2 – 20) is available in two installation heights and can be installed as a function of the respective installation situation and the individual user requirements in the following Viega pre-wall systems:

- Viega Steptec
- Viega Eco Plus
- Viega Mono

Concealed cistern 2 – equipment

Concealed cistern	Element/module height [mm]		Arrangement of actuation
2 H	1130/980		front
2L	Steptec Viega Eco Plus Mono	CH 840 CH 830 mm CH 820 mm	front/top

Table 2 – 20

Concealed cistern 2 H

Fig. 2 – 97 Concealed cistern 2H

Features

- Cistern volume 9 l with dual flush technology
- pre-mounted water path
- Partial flush volume adjustable from 3 to 4 l
- Full-flush volume steplessly adjustable from 6 to 9 l
- Filling hose routed inside the concealed cistern
- Easy mounting due to Bowden cable technology
- Concealed cistern 2L convertible from actuation front to top

Viega flushing throttle

The Viega concealed cisterns 2H, 2C and 2S with 1130 mm construction height will be equipped with a flushing throttle as standard as from 2017. This means the flush rate can be reduced without reducing the flush volume. Thanks to the flushing throttle, splashing over rimless WC ceramics is now a thing of the past. The device has five settings for adjustment to the respective installation situation. Viega cisterns that are already installed can be retrofitted in a few minutes. In addition, the flushing throttle is available as an individual item (model 8310.93).

The factory setting of the flushing throttle will allow the maximum flowthrough volume without restriction. However, the flow rate can be reduced without the use of tools. There are five possible settings: With a simple rotary movement, the throttle cross-section is reduced until no water splashes over the edge during flushing. The flush volume remains unchanged despite the adjustment, and the full flush power is also maintained.

The new flushing throttle is not only ideal for rimless WC ceramics, but also for special installations such as toddler and baby toilets in kindergartens.

Flush plates with mechanic actuator
The WC cistern is factory-mounted with an actuating mechanism, which shall be removed when a flush plate with a Bowden cable unit is installed. The chapter on flush plates starting on page *P. 111* ff. describes the equipment features of all model variants.

Flush actuation with mechanic actuator – factory-mounted
- Standard
- Visign for Public 1
- Visign for Style 10/13/14

Flush actuation with Bowden cable technology – scope of delivery flush plate
- Visign for Public 2
- Visign for Style 11, 12
- Visign for More

Flush actuation touchless
Infrared technology
- Visign for Public 5
- Visign for Public 6

Sensitive
- Visign for More 100 & 105 sensitive
- Visign for Care sensitive
- Visign for Style sensitive

Flush actuation external – button, radio controlled
WC flush actuation for
- Concealed cistern 2 H model 8350.31
- Concealed cistern 2 H/2L model 8350.32

Mounting instructions
- The water path is completely pre-assembled inside the WC cistern. During commissioning, only the corner valve is opened, the supply line is flushed once and then the selected flush plate is mounted.

- **Cistern 2 H**
  The water connection of the WC cistern is factory-mounted on the left side. The conversion to the top side is possible without any additional material.

WC element – Villeroy & Boch »Green Gain«
To reduce operating costs and save water resources, Viega developed together with the manufacturer of sanitary objects Villeroy & Boch a WC pre-wall element with a particularly low water requirement.
The WC element »Green-Gain« from Viega, in combination with the newly developed water distribution system of the »Omnia Architectura« WC ceramic from Villeroy & Boch saves approx. 40 % water at an equal flushing performance.

- Full-flush volume adjustable 3.5 / 4.5 / 6 l
- Partial flush volume 2 l

The WC element is connected to wastewater pipes DN 90 and is perfectly suitable for new buildings.

Orders can be placed exclusively with Villeroy & Boch.

Fig. 2 – 98 WC element »Green-Gain«

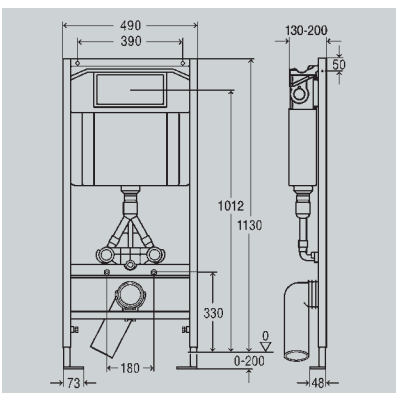

Fig. 2 – 99 Installation dimensions

WC pre-wall element

V&B art. no. 9222 21 00

for WC ceramic »Omnia Architectura«

V&B art. no. 5638_10

Fig. 2 – 100 Flush plate

Flush plate

»Green-Gain«

Extraction capacity
Max. 15 m³/h

WC element – odour extraction

Unpleasant odours in inner bathrooms and much frequented toilet systems can be considerably reduced by installing flushing pipe elbows with a direct connection with the fan system. When the extractor fan starts up, odours are extracted immediately and elaborate ventilation through windows or ventilation openings becomes redundant.

When using Viega WC pre-wall elements and modules with construction height 1130 mm only the factory-mounted flushing pipe elbows need to be replaced (see **Table 2 – 21**).

Mounting instructions

The connection of the flushing pipe elbow with the branch connection of the single or central fan system has to be implemented water tight up to 100 mm above the WC cistern – e.g. with a HT-resistant pipe DN 50 (see Fig. 2 – 102), to allow the discharge of arising condensate in the WC ceramic. Direct connection with Aluflex or spiral-seam pipe is not permissible.

Viega Eco Plus WC element
With flushing pipe elbow and extractor fan connection

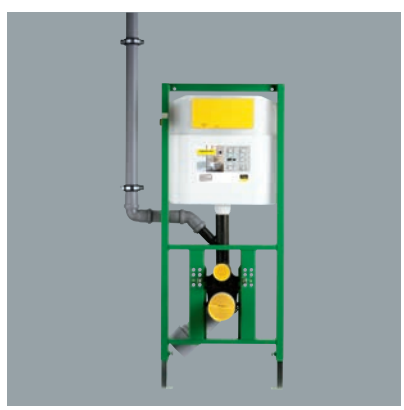

Fig. 2 – 101 Viega Eco Plus WC element

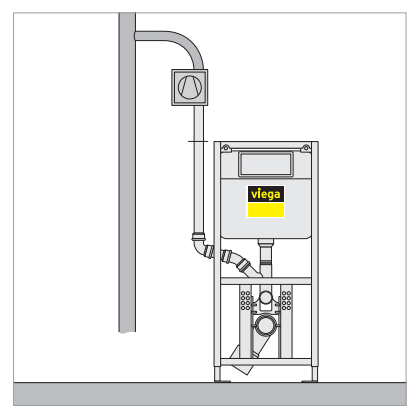

Fig. 2 – 102 Odour extraction

Overview of WC elements/modules

Pre-wall element	Feature	Model	Art. No.	Flushing pipe elbow
Steptec WC module	CH 1130	8461.3	656 102	8310.26
	CH 980		656 119	
Viega Eco Plus WC element	CH 1130	8161.2	606 664	
	CH 980		704 070	
	4.5 l full-flush volume	8161.45	686 154	
	For SensoWash	8161.95	699 451	
	For floor-mounted WC	8161.15	705 831	
Viega Eco Plus Universal shower WC	CH 1130	8161.20	736 859	
Viega Mono WC pre-wall block	CH 980/1130	8310.2	606 732	8310.78

Table 2 – 21

WC element – individual seat height adjustment
The following WC elements/modules are suited for the subsequent adaptation of WC seat heights:

- Steptec WC module, model 8461.21, Art. No. 700 010, construction height 1110–1130 mm, actuation from front
- Viega Eco Plus WC element – model 8161.21, Art. No. 700 652, construction height 1130 mm, actuation from front

With already tiled walls, the seat height can be adjusted steplessly from 410–490 mm (floor level to upper edge of WC ceramic) without removing the WC ceramic. It is sufficient detaching the WC ceramic at the fixing points.

Combination with all common WC ceramics is possible. A stainless steel cover plate model 8040.21 art. no. 703 387 is available as an accessory to cover the setting range area behind the WC ceramic.

Fig. 2 – 103 WC module

Fig. 2 – 104 Adjustment height

Technical data

- Partial flush volume – factory-set to approx. 3 l
- Partial flush volume – setting range approx. 3–4 l
- Full-flush volume – factory-set to approx. 6 l
- Full-flush volume – setting range approx. 6–9 l

Flushing systems

Flush-stop technology

The Viega flush-stop technology allows stopping the flushing process started with the large flush button by the small flush button before the whole flush volume has drained.

Viega concealed cisterns »1H/1S/2H/2S« can be retrofitted in combination with the mechanical flush plates »Visign for Public 1« and »Standard flush plate«. Drain valve set model 8180.17 is required (article number 462 222).

Dual flush technology

Regulating the flush volume

Viega dual flush technology for WCs allows flushing with a full-flush volume (large button) or a smaller partial flush volume (small button). The flush volumes are adjustable independently one from the other and when the partial flush volume is consequently used, the water consumption is reduced.

Adjustable flush volumes

- Full-flush volume 6–9 l
- Partial flush volume 3–4 l
- If the full-flush volume is set to 6 l (factory setting), the 3 l-partial flush volume can be used for subsequent flushing after the full-flush volume has drained.

Concealed cistern Visign 2

Position of the sliders

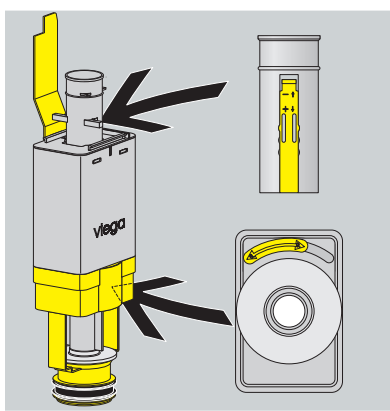

Fig. 2 – 105 Flush volume regulation

The flush volumes are set at the drain valve – disassembly is necessary (**Fig. 2 – 105**).

- Partial flush volume 3–4 l
  Slider at the valve side
- Full-flush volume 6–9 l
  Rotary adjustment at the underside of the valve.

WC actuation

Flush plates

The »Visign« flush plate series – for WCs and urinals – consists of the design lines

- Visign for Public
- Visign for Style
- Visign for More

Urinal prefabricated kits matching these WC flush plates are available.

Compatibility

»Visign« WC flush plates can be used for the Viega concealed cistern »Visign 2« from the year of construction 2007 on.

The »Visign for Public, Visign for Style and Visign for More« flush plates can be incorporated in the Viega concealed cistern »Visign 1«, years of construction 1999 to 2007 with the aid of a drain valve set.

From the »Visign 1« concealed cistern to »Visign for Style« and »Visign for More« flush plates

Pre-wall system	Product name	Model	Art. no.	Drain valve set
Steptec	WC module, CH 1130 mm	8461	471927	611224
	WC module, CH 980 mm	8461	491529	
	WC module, CH 840 mm, actuation from top	8437	471903	611248
	WC module, CH 840 mm, actuation from front	8438	471910	611231
Viega Eco Plus	WC element, CH 1130 mm	8161.5	461591	611 224
	WC element, CH 830 mm, actuation from top	8137	455729	611248
	WC element, CH 830 mm, actuation from front	8138	461775	611231
	WC corner element, CH 1130 mm	8141	566937	611255
	WC corner element, CH 980 mm	8141	566937	
Viega Mono	WC block, CH 1130/980 mm	8310	382186	611224
	WC block, CH 820 mm, actuation from top	8337	460525	611248
	WC block, CH 820 mm, actuation from front	8338	460532	611231
Viega Eco from 04/2009 on	WC element, CH 1130 mm	8180.25	606671	8180.0
	WC element, CH 1130 mm	8180.25	606688	

Table 2 – 22

Viega flush plate configurator

The range of Viega flush plates in plastic, metal and glass variants is huge. To make selection easier, a configurator that visualises the flush plates in the particular installation situation is available on the Viega homepage. Plaster, tile and natural stone surroundings can be simulated and the effect of the selected model assessed in a realistic way.

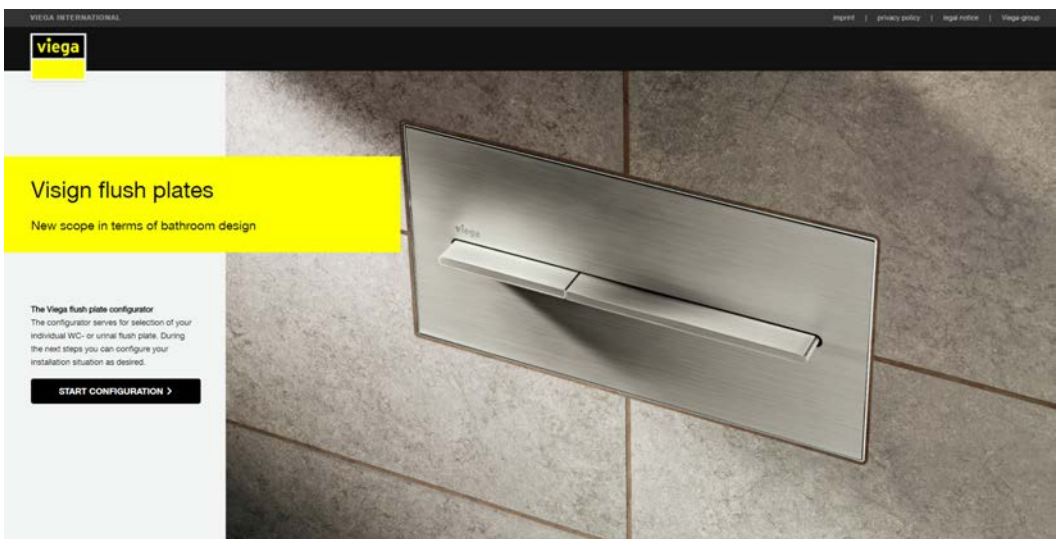

Fig. 2 – 106 Viega configurator flush plates

All available WC and urinal flush plates can be called up.

Filter functions allow the targeted search according to the requirements of the user and the installer.

Search criteria are:

- Flush plates
  - Material
  - Colour
  - Design

- Technology
  - Type of actuation – mechanical, electronic, touchless
  - Flushing technology – single volume, dual volumes, Hygiene+ function
  - Cistern design

- Hygiene requirements on the flushing system
  - Time interval
  - Requirement-controlled

Configuration sequence

■ Selection of the flush plate model

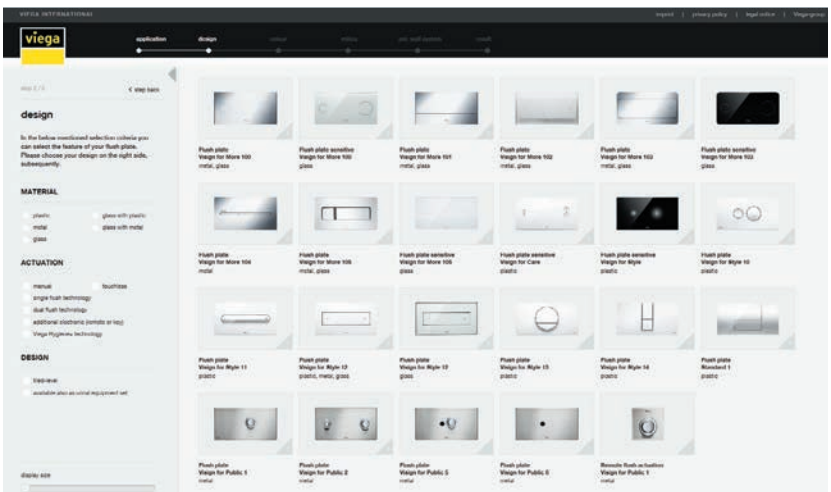

Fig. 2 – 107 Flush plates – model selection

■ Selection of the Viega pre-wall system or the WC element

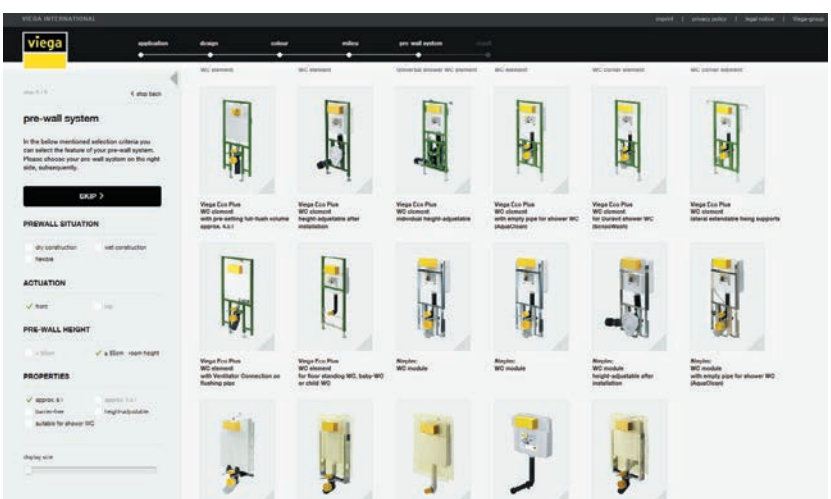

Fig. 2 – 108 Selection of the pre-wall elements

When the selection has been completed, the list with all material required for ordering/installation can be printed or downloaded.

Overview of the equipment features

Steptec WC modules – equipment features

Construction height [mm]/ actuation	Article-No.	Dual-volume flushing function	Hygiene+ flushing function	230 V mains connection	Touchless flush actuation	Tile-level installation	Vandalism proof/can be screwed on	Can be combined with electric WC flush
1130/front	700 010							
	656 102							
980/front	656 119							
840/front/top	718 954							
Flush plates	**Model**				**Plastic**			
Standard 1	8180.1	✓						✓
Visign for Style 10	8315.1	✓				✓		✓
Visign for Style 11	8331.1	✓				✓		✓
Visign for Style 12	8332.1	✓				✓		✓
Visign for Style 13	8333.1	✓						✓
Visign for Style 14	8334.1	✓				✓		✓
Visign for Style sensitive	8315.11	✓	✓	✓	✓	✓		
Visign for Care sensitive	8352.21	✓	✓	✓	✓	✓		
	Model				**Metal**			
Visign for Public 1	8326.1						✓	✓
Visign for Public 2	8327.1	✓					✓	✓
Visign for Public 5	8326.16		✓	✓	✓			
Visign for Public 6	8326.15	✓	✓	✓	✓			
Visign for Public/remote actuation	8326.21						✓	
Visign for Public/cover plate	8326.9						✓	✓
Visign for Style 12	8332.1	✓				✓	✓	✓
Visign for More 100	8352.1	✓				✓		✓
Visign for More 101	8351.1	✓				✓		
Visign for More 102	8353.1	✓				✓		✓
Visign for More 103	8355.1	✓						✓
Visign for More 104	8354.1	✓				✓		✓
Visign for More 105	8357.1	✓				✓	✓	✓
	Model				**Glass**			
Visign for Style 12	8332.1	✓				✓		✓
Visign for Style 12	8332.4	✓				✓		✓
Visign for More 100	8352.1	✓				✓		✓
Visign for More 100 sensitive	8352.11	✓	✓	✓	✓	✓		
Visign for More 100 sensitive	8352.12	✓	✓		✓	✓		
Visign for More 103 sensitive	8352.11	✓	✓	✓	✓			
Visign for More 103 sensitive	8352.12	✓	✓		✓			
Visign for More 105 sensitive	8357.11	✓	✓	✓	✓			
Visign for More 101	8351.1	✓				✓		
Visign for More 102	8353.1	✓				✓		✓
Visign for More 103	8355.1	✓						✓
Visign for More 105	8357.1	✓				✓		✓

Table 2 – 23

Viega Eco Plus WC elements / corner elements – equipment features

Viega Eco Plus WC elements Construction height [mm] / actuation	Article-No.	Dual-volume flushing function	Hygiene+ flushing function	230 V mains connection	Touchless flush actuation	Tile-level installation	Vandalism proof/can be screwed on	Can be combined with electric WC flush
980 / front	704 070							
1130 / front	606 664 700 652 708 764 736 859							
840 / top	718 336							
Viega Eco Plus WC corner elements								
1130 / front	606 725							
980 / front	606 718							
Flush plates	**Model**				**Plastic**			
Standard 1	8180.1	✓						✓
Visign for Style 10	8315.1	✓				✓		✓
Visign for Style 11	8331.1	✓				✓		✓
Visign for Style 12	8332.1	✓				✓		✓
Visign for Style 13	8333.1	✓						✓
Visign for Style 14	8334.1	✓				✓		✓
Visign for Style sensitive	8315.11	✓	✓	✓	✓	✓		
Visign for Care sensitive	8352.21	✓	✓	✓	✓	✓		
	Model				**Metal**			
Visign for Public 1	8326.1						✓	✓
Visign for Public 2	8327.1	✓					✓	✓
Visign for Public 5	8326.16		✓	✓	✓		✓	
Visign for Public 6	8326.15	✓	✓	✓	✓		✓	
Visign for Public / remote actuation	8326.21						✓	
Visign for Public / cover plate	8326.9						✓	✓
Visign for Style 12	8332.1	✓				✓	✓	✓
Visign for More 100	8352.1	✓				✓		✓
Visign for More 101	8351.1	✓				✓		
Visign for More 102	8353.1	✓				✓		✓
Visign for More 103	8355.1	✓						✓
Visign for More 104	8354.1	✓				✓		✓
Visign for More 105	8357.1	✓				✓	✓	✓
	Model				**Glass**			
Visign for Style 12	8332.1	✓				✓		✓
Visign for Style 12	8332.4	✓				✓		✓
Visign for More 100	8352.1	✓				✓		✓
Visign for More 100 sensitive	8352.11	✓	✓	✓	✓	✓		
Visign for More 100 sensitive	8352.12	✓	✓		✓	✓		
Visign for More 103 sensitive	8352.11	✓	✓	✓	✓			
Visign for More 103 sensitive	8352.12	✓	✓		✓			
Visign for More 105 sensitive	8357.11	✓	✓	✓	✓			
Visign for More 101	8351.1	✓				✓		
Visign for More 102	8353.1	✓				✓		✓
Visign for More 103	8355.1	✓						✓
Visign for More 105	8357.1	✓				✓		✓

Table 2 – 24

Eco WC elements – equipment features

Construction height [mm] / actuation	Article-No.	Dual-volume flushing function	Tile-level installation	Vandalism proof/can be screwed on	Can be combined with electric WC flush
1130 / dual flush technology	606 688				
Flush plates	**Model**		**Plastic**		
Standard 1	8180.1	✓			✓
Visign for Style 10	8315.1	✓	✓		✓
Visign for Style 13	8333.1	✓			✓
Visign for Style 14	8334.1	✓	✓		✓
	Model		**Metal**		
Visign for Public 1	8326.1			✓	✓
Visign for Public	8326.9			✓	✓

Table 2 – 25

Viega Mono – equipment features

Viega Mono WC block Construction height [mm]/ actuation	Article-No.	Dual-volume flushing function	Hygiene+ flushing function	230 V mains connection	Touchless flush actuation	Vandalism proof/can be screwed on	Can be combined with electric WC flush
980–1130 front	606 732						
835/ top	606 749						
835/front	606 756						
Flush plates	**Model**			**Plastic**			
Standard 1	8180.1	✓					✓
Visign for Style 10	8315.1	✓					✓
Visign for Style 11	8331.1	✓					✓
Visign for Style 12	8332.1	✓					✓
Visign for Style 13	8333.1	✓					✓
Visign for Style 14	8334.1	✓					✓
Visign for Style sensitive	8315.11	✓	✓	✓	✓		
Visign for Care sensitive	8352.21	✓	✓	✓	✓		
	Model			**Metal**			
Visign for Public 1	8326.1					✓	✓
Visign for Public 2	8327.1	✓				✓	✓
Visign for Public 5	8326.16		✓	✓	✓		
Visign for Public 6	8326.15	✓	✓	✓	✓		
Visign for Public/remote actuation	8326.21					✓	
Visign for Public/cover plate	8326.9					✓	✓
Visign for Style 12	8332.1	✓				✓	✓
Visign for More 100	8352.1	✓					✓
Visign for More 101	8351.1	✓					
Visign for More 102	8353.1	✓					✓
Visign for More 103	8355.1	✓					✓
Visign for More 104	8354.1	✓					✓
Visign for More 105	8357.1	✓				✓	✓
	Model			**Glass**			
Visign for Style 12	8332.1	✓					✓
Visign for Style 12	8332.4	✓					✓
Visign for More 100	8352.1	✓					✓
Visign for More 100 sensitive	8352.11	✓	✓	✓	✓		
Visign for More 100 sensitive	8352.12	✓	✓		✓		
Visign for More 103 sensitive	8352.11	✓	✓	✓	✓		
Visign for More 103 sensitive	8352.12	✓	✓		✓		
Visign for More 105 sensitive	8357.11	✓	✓	✓	✓		
Visign for More 101	8351.1	✓					
Visign for More 102	8353.1	✓					✓
Visign for More 103	8355.1	✓					✓
Visign for More 105	8357.1	✓					✓

Table 2 – 26

Fig. 2 – 109 Flush plate Visign for More sensitive

Visign for Public 5/6 – infrared technology

System description

VDI guideline 6000 recommends touchless flush actuation of the WC flush for sanitary rooms in public and semi-public areas – e.g. for service stations and stadiums.

The Visign for Public 5 and 6 WC flush plates meet the requirements specified above and in addition are durable, protected against theft, and their smooth surfaces can be cleaned easily.

Fig. 2 – 110 Visign for Public – surfaces

Fig. 2 – 111 Public field

Features

- Stainless steel material, surface brushed and alpine white
- Optional battery operation possible
- Integrated Viega Hygiene+ function – a flush program can be optionally activated that trips automatic flushing at intervals of 24, 72 or 168 hours with 3, 6 or 9 litres.

Viega Hygiene+ function

- **Visign for Public 5 only**
  Flushing can also be actuated by a mechanical button (power failure). For both types of actuation, always a large flush volume is triggered.

Special function

- **Visign for Public 6 only**
  depending on the detected time of use (30/60/90 s) either the large or partial flush volume can be tripped.

Special function

Functions

For both design variants, flush actuation is touchless by infrared technology.

Fig. 2 – 112 Visign for Public 5

The detection distinguishes between close and remote ranges, where in the close range (approx. 30 mm) flushing can be triggered at any time – before and after use – by approaching the hand to the infrared sensor.
In the remote range (450–550 mm) automatic flushing is always triggered when the user leaves the sensing range after a defined time has elapsed.

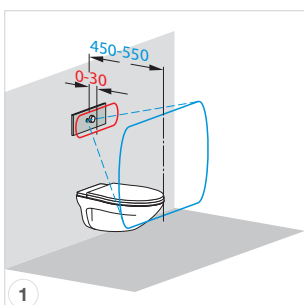

Fig. 2 – 113

Close range 0–30 mm
Remote range 450–550 mm

Fig. 2 – 114

Flush actuation in the close range is disabled if a person stays for longer than 8 seconds in the remote range – undesired flush actuation is avoided.

After the flush is actuated, the close range sensor can then be used to actuate a second flush by hand.

Fig. 2 – 115

If a person leaves the remote range, a flush is automatically actuated with the full-flush volume.
After use, an additional flush cycle can be actuated through the close range sensor.

Visign for Public 6 only
If the person leaves the remote range within an adjustable time (30, 60, 90 s), a partial flush volume is triggered.
If the person stays longer, a flush is automatically actuated with the full-flush volume.

Assembly
Visign for Public 5 and 6
The major assembly steps are shown in the illustrations.

Fig. 2 – 116

Disassemble the flush mechanism, detach the connection filling hose/filling valve, insert mains voltage cable, mount Bowden cable motor.

Fig. 2 – 117

Connect control with mains voltage and Bowden cable motor.

Fig. 2 – 118

Mount the control in the bracket, connect filling hose again with filling valve.

Fig. 2 – 119

Install mechanism (Visign for Public 5 only) and connect it with the drain valve. Mount actuating rod and adjust it.

Fig. 2 – 120

Connect the infrared actuation with the control.

Fig. 2 – 121

Mount the flush plate.

Features
Public 5: Can be combined with concealed cistern 2H, single flush technology; manual flush actuation in addition
Public 6: Can be combined with concealed cistern 2H, dual flush technology
Public 5 and 6
- Touchless flush actuation by infrared detection
- In stainless steel, can be screwed on, vandalism proof
- Power pack (mains voltage 110–240 V AC / 50–60 Hz)
- Viega Hygiene+ function
- Control suitable for further external signals for flush actuation – e.g. radio controlled, button with closing function, motion detector, etc.

Electronic WC flush actuation

System description

WCs in barrier-free sanitary rooms must be equipped with flush actuation that can be easily reached by users and nursing staff. The Viega concealed cistern can be combined with electronic flush actuations with their remote-controlled or cable-connected buttons being mounted at the handholds of the WCs or at any place in the room. It has to be observed in planning, that a power connection is available in the area of the concealed cistern.

The Viega concealed cisterns 2 H and 2 L can be optionally combined with flush plates for manual WC flush actuation.

Combination options – flush plates/concealed cistern

	Viega concealed cistern	
	2H	**2L**
Flush plates – manual and with mechanism	WC flush actuation Model 8350.31 art. no. 696 139	–
Standard		
Visign for Public 1		
Visign for Style 10/13/14		
Flush plates – manual with Bowden cable	WC flush actuation Model 8350.32 art. no. 696 146	
Visign for Public 2		
Visign for Style 11 / 12		
Visign for More 100/102/103/104/105		

Table 2 – 27

The WC flush actuations can be extended by the accessories listed on the following page.
The extension adapter can be used for installing another external flush actuation for example. If flush actuation shall be triggered by a radio signal (button at the support hinged handle), the WC flush actuation must be extended by the radio receiver. Only one radio receiver is necessary even if two radio actuations are installed.
All WC flush actuations are equipped with the Viega Hygiene+ function that can be activated with the programming set.

WC flush actuation model 8350.31, article number 696 139

- For concealed cistern Visign 2 H – CH 1130/980 mm, actuation at front
- With single flush technology – full-flush volume
- For flush plates Standard
- For flush plate Visign for Public 1
- For flush plates Visign for Style 10, 13 and 14
- With Viega Hygiene+ function – flush intervals: 24, 72, 168 h
  – flush volumes: 3, 6, 9 l
- With connection cable for external flush actuation by on-site button with closing function or potential-free contact
- Electronically by power pack operation, mains voltage 110–240 V AC/50–60 Hz

WC flush actuation model 8350.32, article number 696 146

- For concealed cistern Visign 2 H – CH 1130/980 mm, actuation at front
- For concealed cistern Visign 2 L – CH 830 mm, actuation front/top
- With dual flush technology – full and partial flush volume
- For flush plate Visign for Public 2
- For flush plates Visign for Style 11 and 12
- For Flush Plates Visign for More 100, 102, 103, 104 and 105
- With Viega Hygiene+ function – flush intervals: 24, 72, 168 h
  – flush volumes: 3, 6, 9 l
- With connection cable for external flush actuation by on-site commercial button with closing function or potential-free contact
- Electronically by power pack operation, mains voltage 110–240 V AC/50–60 Hz

Accessories

- Programming set, model 8350.26, art. no. 664 053, for activation of Viega Hygiene+ function
- Battery compartment, model 8350.13, art. no. 633 318, alternative of mains operation
- Radio receiver, model 8350.35, art. no. 696 177
- Receiver for radio trigger e.g. in conjunction with support hinged handles
- Extension adapter, model 8350.36, art. no. 696 184, for connection of another input signal – external trigger, radio actuation, infrared flush plate, etc.
- Installation set for concealed socket/concealed cistern, model 8350.14
- Adapter for redundant power supply for power pack operation, model 8355.91

Usage examples

Five installation examples describe typical installation situations for electronic flush actuation using Viega products, WC modules/elements and pre-wall systems.

Example 1

Required WC flush actuation

Touchless by infrared flush plate Visign for Public 6 – with mains connection.

Required Viega products

- Flush plate Visign for Public 6, brushed (art. no. 699505)
- Installation set (optional), art. no. 655426

Flush actuation touchless with infrared technology

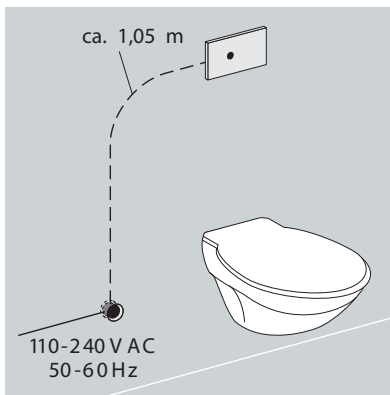

Fig. 2 – 122 Example 1 – installation

Installation information

Cable length of power pack 1.05 m, optional extension art. no. 628505

Special function

Viega Hygiene+ function can be activated.

Viega WC elements/modules that can be used

- Steptec
  Steptec WC module with 2 H cistern – CH 1130 and 980 mm
- Viega Eco Plus
  Viega Eco WC elements with 2 H cistern – CH 1130 and 980 mm
- Mono
  Mono WC pre-wall blocks with 2 H cistern – CH 1130 / 980 mm

Example 2

Required WC flush actuation

- Touchless by infrared flush plate Visign for Public 6 – with mains connection
- Additionally with two radio actuations at the support hinged handles

Required Viega products

- Flush plate Visign for Public 6, art. no. 699505
- Installation set (optional), art. no. 655426
- Extension adapter, art. no. 696184
- Radio receiver, art. no. 696177

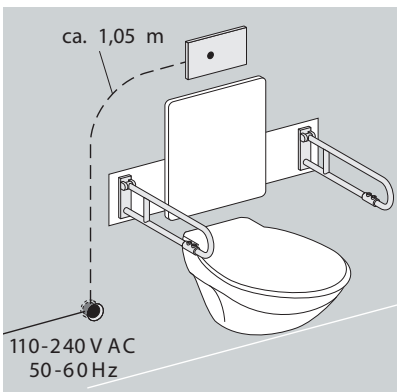

Fig. 2 – 123 Example 2 – installation

Installation information

- Cable length of power pack 1.05 m, optional extension
- Support hinged handles and radio actuation on site

Flush actuation touchless and with external buttons

Special function

Viega Hygiene+ function can be activated.

Viega WC elements/modules that can be used

- Steptec
  Steptec WC module with 2 H cistern – CH 1130 and 980 mm
- Viega Eco Plus
  Viega Eco WC elements with 2 H cistern – CH 1130 and 980 mm
- Mono
  Mono WC pre-wall blocks with 2 H cistern – CH 1130/980 mm

Example 3

Required WC flush actuation

- Touchless by infrared flush plate Visign for Public 6 – with mains connection
- Additionally with two radio actuations at the support hinged handles
- Additionally by an external button

Required Viega products

- Flush plate Visign for Public 6, art. no. 699505
- Installation set (optional), art. no. 655426
- Connection cable sensitive, art. no. 631840
- 2x extension adapter, art. no. 696184
- Radio receiver, art. no. 696177

Flush actuation touchless and by button

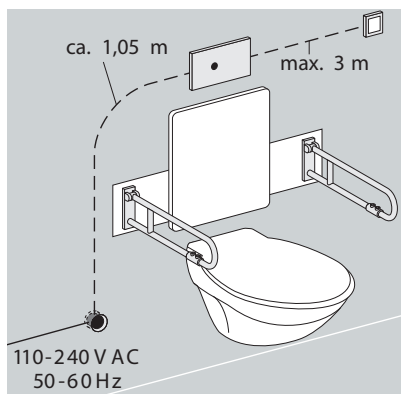

Fig. 2 – 124 Example 3 – installation

Installation information

- Cable length of power pack 1.05 m, optional extension
- Support hinged handles and radio trigger on site
- Button on site – potential-free with closing function, cable length 3 m

Special function

Viega Hygiene+ function can be activated.

Viega WC elements/modules that can be used

- Steptec
  Steptec WC module with 2 H cistern – CH 1130 and 980 mm
- Viega Eco Plus
  Viega Eco WC elements with 2 H cistern – CH 1130 and 980 mm
- Mono
  Mono WC pre-wall blocks with 2 H cistern – CH 1130 / 980 mm

Example 4

Required WC flush actuation

- Vandalism proof flush plate (dual flush technology)
- Additionally with two radio actuations at the support hinged handles
- Additionally by an external button

Required Viega products

- Flush plate Visign for Public 2, brushed, art. no. 672058
- WC flush actuation, art. no. 696146
- Extension adapter, art. no. 696184
- Radio receiver, art. no. 696177

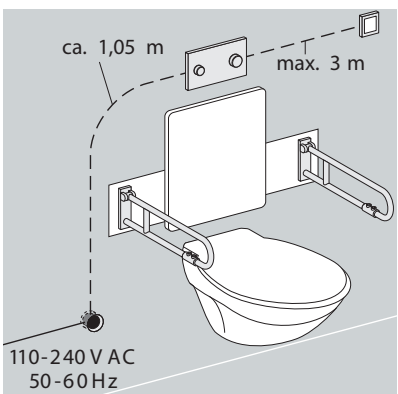

Fig. 2 – 125 Example 4 – installation

Installation information

- Cable length of power pack 1.05 m, optional extension
- Support hinged handles and radio trigger on site
- Button on site – potential-free with closing function, cable length 3 m

Flush actuation touchless and with radio controlled buttons

Special function

Viega Hygiene+ function can be activated.

Viega WC elements/modules that can be used

2H and 2L cistern for

- Steptec
- Viega Eco Plus
- Mono

Example 5

Required WC flush actuation

- Touchless by flush plate Visign for Care sensitive – with mains connection and dual flush technology
- Additionally with two radio actuations at the support hinged handles
- Additionally by an external button

Required Viega products

- Flush plate Visign for Care sensitive, alpine white, art. no. 653828
- Installation set (optional), art. no. 655426
- Extension cable (due to suspended ceiling), art. no. 628505
- Adapter with battery compartment (optional), art. no. 655433
- Radio receiver, art. no. 696177
- Connection cable sensitive, art. no. 631840

Flush actuation touchless and with external buttons

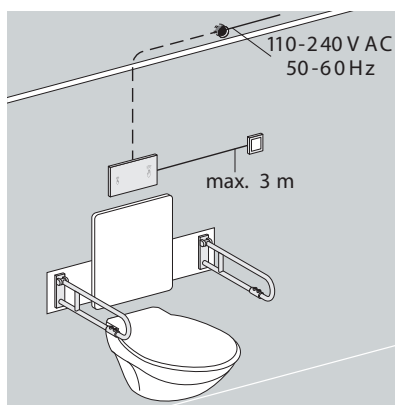

Fig. 2 – 126 Example 5 – illustration of installation

Installation information

- Cable length of power pack 1.05 m, optional extension
- Support hinged handles and radio trigger on site
- Button on site – potential-free with closing function, cable length 3 m
- Installation identical for flush plates Visign for More sensitive
- Power pack in suspended ceiling with extension art. no. 628505
- Redundant power supply of the flush plate

Special function

Viega Hygiene+ function can be activated.

Viega WC elements/modules that can be used

2H and 2L cistern for

- Steptec
- Viega Eco Plus
- Mono

Tablet holder for WC cleaning tabs
The WC tablet holder (model 8315.9) allows adding WC cleaner tablets into the flush water. Combined with Viega concealed cistern 2H/2C/1F and flush plate Visign for Style 10, cleaner tablets can be filled into a tablet holder in the cistern to ensure pleasant freshness and hygiene in the bathroom each time the flush is actuated. A perfect solution, especially for rimless WC ceramics.

Conventionally, toilet cleaning tabs or fresheners have been attached under the bowl rim. This is less than ideal both from the visual as well as hygienic points of view, for bacteria can easily collect there. In contrast, Viega's tablet holder hides discretely behind the flush plate.

A special magnetic installation frame makes replacing the tab (by the end consumer) uncomplicated. The WC flush plate can be easily removed to the front and swung away. Then the cleaner tablet is inserted and the flush plate swung up in place again. There are two brackets and two magnets that ensure that the flush plate returns to the correct position. The magnets have just the right strength to make sure that adults can open the flush plate easily, but it is too difficult for small children – an important safety plus.

The WC cleaner tablets used have to be chlorine-free.

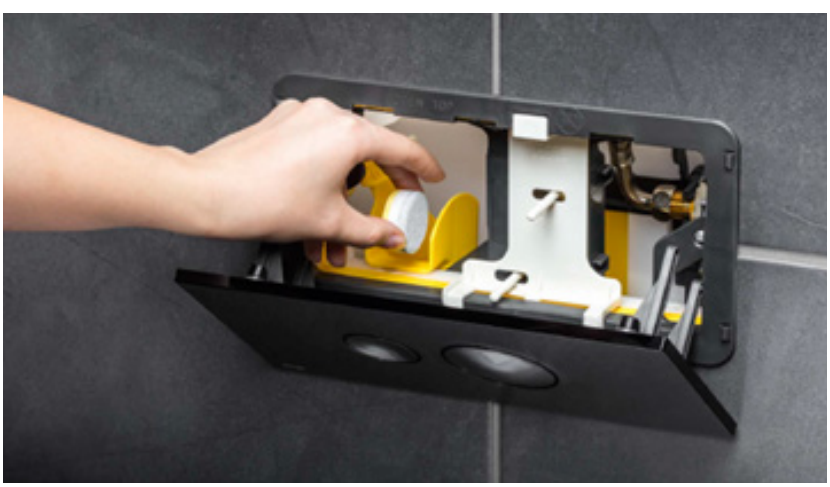

Fig. 2 – 127

Tile-level installation
WC flush plate and urinal prefabricated kits of design lines »Visign for Style«, »Visign for More« can be installed tile-level in the Viega pre-wall systems »Viega Steptec« and »Viega Eco Plus«.

Mounting instructions

Installer and tiler work have to be agreed before starting the assembly.

- Installer
  The installation frame is bonded on the cladding panel and the chrome-plated inner frame is adjusted to the respective tile thickness (incl. tile cement).
- Tiler
  The tiles are laid up to the aligned inner frame.
- Installer
  The selected flush plate is mounted.

Overview installation frame/compatible WC flush plates

Installation frame WC	Model	Flush plates
	8330.21	Visign for Style 10, model 8315.1 / Visign for Style 11, model 8331.1 / Visign for Style 12, model 8332.1 / Visign for Style 14, model 8334.1 / Visign for More 100 sensitive, models 8352.11 and 8352.12 Visign for Care sensitive, model 8352.21 Visign for Style sensitive, model 8315.11
	8350.23	Visign for More 100, model 8352.1 / Visign for More 101, model 8351.1 / Visign for More 102, model 8353.1 / Visign for More 104, model 8354.1

Table 2 – 28

Tile-level installation – »Visign for Style 12«

The »Visign for Style 12« flush plate is also available as tile-level equipment variant of tempered glass (TG).

As the tile-level installation frame, they can be combined with the WC modules and elements of the Viega pre-wall systems, Viega Steptec and Viega Eco Plus.

Visign for Style 12
Model 8332.4

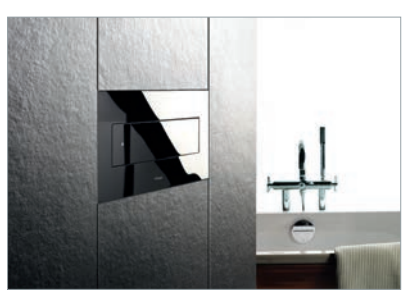

Fig. 2 – 128 Design flush plate

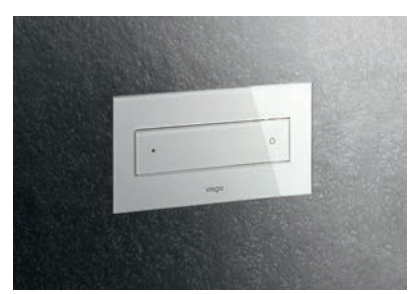

Fig. 2 – 129 Design flush plate

Functional unit for natural stone coverings

WC flush plates can be equipped with the same material as the pre-wall finish is made of – e.g. natural stone. Surface-flush installation is possible in Viega pre-wall systems »Viega Steptec« and »Viega Eco Plus«.

Mounting instructions

Installer and tiler work have to be agreed before starting the assembly.
A piece fitting for the flush plate is cut from the pre-wall finish material – thickness must be in the range between 4 and 4.5 mm. The cut piece is bonded on the functional unit with a suitable silicone adhesive.

The further mounting sequence of the installation frame is the same as for the tile-level installation frame.

Fig. 2 – 130 Functional unit

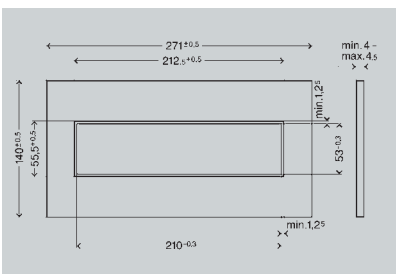

Fig. 2 – 131 Installation dimensions

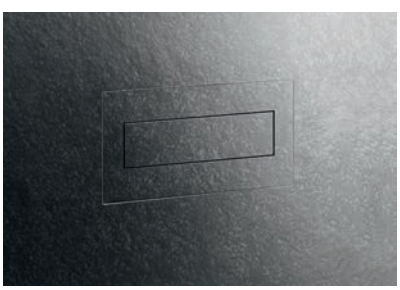

Fig. 2 – 132 Natural stone flush plate

Flush plate

With integrated natural stone covering

Types of actuation

Touchless electronic actuation

Flushing with »Visign for More Sensitive« is triggered completely touchless. For this particularly hygienic solution it is sufficient to move the hand in front of the flush plate.

Further functions of the electronic control

- Electronic flush volume regulation – large volume and partial flush volume
- Cleaning function – flushing is suppressed for one minute, e.g. for cleaning the flush plate, by moving a magnetic pin over the Viega logo.

Emergency actuation in the event of a power failure or if the battery is empty – can be operated manually; behind the flush plate.

Visign for More Sensitive

Flush plates of TG, with small (3 l) and full-flush volume (6 l)

Fig. 2 – 133 Visign for More 100 sensitive

Fig. 2 – 134 Visign for More 105 sensitive

Electrical system

Planning 230 V connection

Concealed connection socket and empty pipe

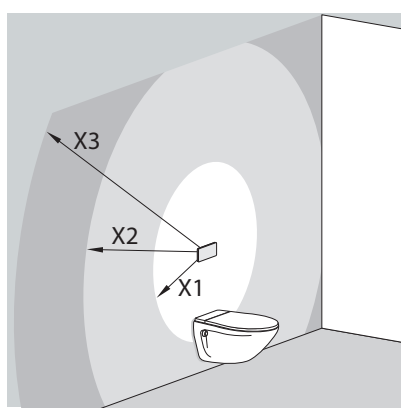

Fig. 2 – 135 Electrical system

The electronics can be supplied with power both from the 230 V mains and via an integrated 6 V battery compartment. Battery operation is particularly useful if manual flush actuation is converted to electronic flush actuation and a mains connection is not available. For planning of the mains connection, a concealed connection socket with a 230 V cable connection has to be provided in the area of the WC element that is connected with the WC cistern via an empty pipe.

Mains connection – connection cable

X1 ≤ 0.75 m – power pack – scope of delivery

X3 ≤ 4.75 m – two extension cables art. no. 628 505

X2 ≤ 2.75 m – extension cable art. no. 628 505

Urinal actuation

Overview – equipment sets

Steptec urinal module – equipment features

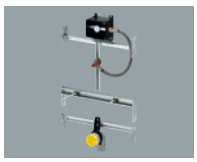

Actuation	Article-No.	Manual flush actuation	Touchless infrared flush actuation	Vandalism proof/can be screwed on	Hygiene+ flushing function	230 V mains connection	Battery operation	Tile-level installation
From front	656 058							
From front	656 065							
Equipment set	**Model**	**Plastic**						
Visign for Style 10	8315.2	✓						✓
Visign for Style 11	8331.2	✓						✓
Visign for Style 12	8332.2	✓						✓
Visign for Style 13	8333.2	✓						
Visign for Style 14	8334.2	✓						✓
Equipment set	**Model**				**Metal**			
Visign for Public	8326.55		✓	✓	✓		✓	
Visign for Public	8326.2	✓		✓				
Visign for Public	8326.65		✓	✓	✓	✓		
Visign for More 100	8351.2	✓						✓
Visign for More 100	8351.65		✓		✓	✓		✓
Visign for More 102	8353.2	✓						✓
Visign for More 103	8355.2	✓						
Visign for More 103	8355.65		✓		✓	✓		
Visign for More 104	8354.2	✓						✓
Equipment set	**Model**				**Glass**			
Visign for More 100	8351.2	✓						✓
Visign for More 100	8351.65		✓		✓	✓		✓
Visign for More 102	8353.2	✓						✓
Visign for More 103	8355.2	✓						
Visign for More 103	8355.65		✓		✓	✓		

Table 2 – 29

Use of the Viega flush plate configurator see P. 112

Viega Eco Plus urinal elements/corner elements – equipment features

Construction height [mm]/ actuation	**Article-No.**	Manual flush actuation	Touchless infrared flush actuation	Vandalism proof/can be screwed on	Hygiene+ flushing function	230 V mains connection	Battery operation	Tile-level installation
1130/from front	461 843							
1300/from front	611 934							
1130/from front	566 975							
1300/from front	611 941							
Equipment set	**Model**				**Plastic**			
Visign for Style 10	8315.2	✓						✓
Visign for Style 11	8331.2	✓						✓
Visign for Style 12	8332.2	✓						✓
Visign for Style 13	8333.2	✓						
Visign for Style 14	8334.2	✓						✓
Equipment set	**Model**				**Metal**			
Visign for Public	8326.2	✓		✓				
Visign for Public	8326.55	✓	✓	✓		✓		
Visign for Public	8326.65		✓	✓	✓	✓		
Visign for More 100	8351.2	✓						✓
Visign for More 100	8351.65		✓		✓	✓		✓
Visign for More 102	8353.2	✓						✓
Visign for More 103	8355.2	✓						
Visign for More 103	8355.65		✓		✓	✓		
Visign for More 104	8354.2	✓						✓
Equipment set	**Model**				**Glass**			
Visign for More 100	8351.2	✓						✓
Visign for More 100	8151.65		✓		✓	✓		✓
Visign for More 102	8353.2	✓						✓
Visign for More 103	8355.2	✓						
Visign for More 103	8355.65		✓		✓	✓		

Table 2 – 30

Overview of the equipment features

Viega Mono urinal installation set – equipment features

Actuation	Article-No.	Manual flush actuation	Touchless infrared flush actuation	Vandalism proof/can be screwed on	Hygiene+ flushing function	230 V mains connection	Battery operation
Front or top	442 439						
equipment set	**Model**				**Plastic**		
Visign for Style 10	**8315.2**	✓					
Visign for Style 11	8331.2	✓					
Visign for Style 12	8332.2	✓					
Visign for Style 13	8333.2	✓					
Visign for Style 14	8334.2	✓					
Equipment set	**Model**				**Metal**		
Visign for Public	8326.2	✓		✓			
Visign for Public	8326.55		✓	✓	✓		✓
Visign for Public	8326.65		✓	✓	✓	✓	
Visign for More 100	8351.2	✓					
Visign for More 100	8351.65		✓		✓	✓	
Visign for More 102	8353.2	✓					
Visign for More 103	8355.2	✓					
Visign for More 103	8355.65		✓		✓	✓	
Visign for More 104	8354.2	✓					
Equipment set	**Model**				**Glass**		
Visign for More 100	8351.2	✓					
Visign for More 100	8351.65		✓		✓	✓	
Visign for More 102	8353.2	✓					
Visign for More 103	8355.2	✓					
Visign for More 103	8355.65		✓		✓	✓	

Table 2 – 31

Overview installation frame/compatible urinal prefabricated kits

Urinal installation frame	Model	Equipment sets
	8330.22	Visign for Style 10, model 8315.2/Visign for Style 11, model 8331.2/Visign for Style 12, model 8332.2/Visign for Style 14, model 8334.2/Visign for More 100 IR, model 8351.65
	8350.24	Visign for More 100, model 8351.2/Visign for More 102, model 8353.2/ Visign for More 104 and model 8354.2

Table 2 – 32

Siphon sensor technology
The siphon sensor technology enables touchless flush actuation of urinals. The sensor is located in the suction moulded piece and therefore needs not be adapted to the respective ceramic variant. Installation is possible in urinals with a horizontal outlet in connection with the following Viega pre-wall models:

- Viega Eco Plus urinal element model 8152.4
- Steptec urinal module model 8121.4

As all the components are concealed and thus protected from vandalism, urinals systems equipped in this way are considered being »vandalism proof«.

Note
- The equipment set siphon sensor technology model 8352.2 is an optional module and always has to be ordered separately.
- A mains connection 230 V is required for operation.

Operating mode
The sensor detects differences in temperature and varying flow conditions in the suction moulded piece – usage of the urinal is detected and flushing triggered.

In addition, the system responds to the following operating conditions:
- The reduced or completely evaporated water seal in the drain is automatically topped up by a flush – unpleasant odours caused by sewer gases from the wastewater system are effectively eliminated.
- A blocked drain is detected and further flushing is suppressed (integrated overflow protection).

Viega Eco Plus urinal element
With siphon sensor technology

Fig. 2 – 136 Urinal element

Fig. 2 – 137 Siphon sensor

Additional programs

- Economy program
  - The user can switch over from the factory-set 3 l flush volume to a program automatically reducing the flush volume to 1 l if the frequency of use increases.
- Service
  - 5 minute flush stop
    e.g. for cleaning the urinal by manual flush actuation
  - Programmable interval flush
    e.g. flush actuation after the reaction time of the descaling agent

- Diagnosis
  – analysis and detection of malfunctions

Benefits

- Vandalism proof
- Lower operating costs thanks to reduced water consumption
- High functional safety with radiation-free sensor
- Elimination of unpleasant odours
- Overflow protection
- Comfortable cleaning and service programs
- Easy to install – the system is immediately ready to operate

Types of actuation for public areas

The touchless flush actuation of urinals is requested especially in public areas. The following function variants are available:

- Siphon sensor technology
- Infrared flush actuation (230 V)
- Infrared flush actuation (optional battery operation)

The covers of the Viega infrared urinals are made of metal and considered being vandalism proof. They can be screw-fastened to protect them against theft.

Application technology

Fire protection in domestic technology

Planning criteria

Planning

Fire protection in domestic technology – also referred to as technical building fire protection – is getting more and more complex and also gaining importance in day-to-day work of the planning specialist and the installer. There is a large number of regulations and official communication of the Deutsches Institut für Bautechnik, Berlin (DIBt) (German Institute for Building Technology) on topics such as mixed installation and rules on distances.

Version

For implementation Viega offers a large scope of technical fire protection system solutions and products with German general building inspectorate test certificates and tests not allowing only universal but also practical solutions – even if the "zero distance" requirement is concerned.

The implementation of fire protection solutions which are at the same time compliant with the statutory stipulations and also fit for practice is made easier by the following product features:

- Special high-density fire protection shells are no longer used
  The insulating shell required for constructional purposes is at the same time the insulation and fire protection.
- Additional extensive bonding is no longer used
  The shell is bonded simply with the pre-fabricated adhesive aluminium tape and secured with galvanised binding wire.
- Cross-joints are always permissible
  The cross-joints of the mineral wool shells can be arranged in any number and at any place.
- Large variety of pipeline systems and combinations with other isolation systems
  The extensively tested fire protection system allows almost every combination thus making the selection easier in particular with regard to the distances to be maintained.
- Combinations are possible with:
  - other general building inspectorate approvals, e.g. fire protection collars and fire protection couplings
  - other general building inspectorate test certificates, e.g. refrigerant/cooling pipes with insulation of synthetic rubber
  - facilitations of the piping system guidelines according to the applicable rules on distances from the proofs of practicability and
  - the rule on distances pursuant to the German piping system guideline, paragraph 4.1.3.

Viega products
For universal use

Viega solutions for fire protection with zero distances are for universal use because

- They are available for all Viega piping systems
  - Profipress, Sanpress, Sanpress Inox, Prestabo, Megapress, Viega Smartpress,
- They fit for all pipe outside diameters from 12–108.0 mm,
- All insulation thicknesses according to EnEV (energy saving German regulation) and had been fire-tested according to the fire protection standard DIN 1988-200,
- Zero distances can be implemented between all Viega piping systems in all combinations common on the market.
- Zero distances at tested combinations between the Viega piping systems and mixed installations with cast iron downpipes and flammable drainpipes are possible,
- Zero distances at tested combinations between the Viega piping systems and WC air extraction systems with shut-off devices according to DIN 18017-3, for electrical isolations for cables, cable bundles, and empty pipes are possible.

Zero distance – definition
Zero distance means that the surfaces of the materials required for fire protection get into contact with each other in the area of the wall or floor breakthrough.

This is for example permissible for:

- Insulated piping – the external edges of the insulating shells,
- fire protection collars, ventilation shutoff devices or tested electrics isolation systems,
  - the external edge of the sheet metal housing,
  - the external edge of the fire protection couplings,
  - the insulation or PE sound insulation film necessary for the fire protection coupling.

This means that zero distance is a dimension that is theoretically achievable because it does not consider possible protruding fixing clamps of the piping itself, the straps for dowel-fastening of fire protection collars, ventilation shut-off devices, etc.

Wall and floor breakthroughs – cement stabilisation
Wall and floor breakthroughs for pipelines the fire protection isolations of which have been routed with »zero distance« may cause the following problems during mounting:

- Drill holes can only be made imprecisely or not at all because hole drilling machines require a minimum working space.
- Proper cement stabilisation of the wall and floor breakthroughs is made more difficult because special tools have to be used or the necessary space for mounting the shuttering formwork is missing.

In most cases the insulation located outside the opening has to be removed to be able to press-seal the hollow spaces with so-called »mortar torpedos«.

When considering all aspects of the parties involved in construction, there is no party to which zero distances brings an advantage – even the contrary is true, the expense of completing the respective work in a professional manner is extremely high.

DIN 4140 requires the minimum distance of 100 mm for fire protection isolations of pipes.
In practice, the distance of 20–50 mm has proven. Thus the effort for completion is kept within reasonable limits and the flexibility is maintained to respond to possible changes in piping assignment or other uncertainties.

Only a few typical system solutions can be presented in this book.

For more detailed information on testing, also for wastewater, ventilation piping, etc., please refer to
- the Internet: www.viega.com
- the Viega brochure »Application technology for structural fire protection«,
- or call Viega Service Center.

Piping isolation
Viega piping isolations are based on:
- Section insulations of mineral wool and Rockwool 800 shells, other mineral wool shells and matts with the melting point of >1,000 C° according to the German general building inspectorate approvals Z-23.14-1114.
- Isolations in solid ceilings ≥150 mm and solid walls or light partitions ≥100 mm

Profipress
Combinations with copper pipes according to DIN EN 1057, DVGW worksheet GW 392, d 12–108.0 mm
- Profipress / -XL – with inner circulation d 28 and 35 mm
- Profipress G / -XL
- Profipress S

Viega Smartpress / Sanfix Fosta
Combination with multilayer pipe, d 16–63.0 mm,
German general building inspectorate test certificate P-3988/5349-MPA-BS
- Viega Smartpress
- Sanfix Fosta

Sanpress
Combination with stainless steel pipe 1.4401 or 1.4521, DIN EN 10 088, DIN EN 10312, d 15 – 108.0 mm
- Sanpress / -XL
- Sanpress Inox / -XL – with inner circulation d 28 and 35 mm
- Sanpress Inox G / -XL

Prestabo
Combination of pipes of non-alloy steel material No. 1.0308 according to DIN EN 10305-3, galvanised on the outside or non-alloy steel material No. 1.0308 according to DIN EN 10305 galvanized on the outside with plastic layer of polypropylene or non-alloy steel 1.0215 according to DIN EN 10 305 galvanised on the inside and outside, d 12–108.0 mm and/or 15–54 mm Prestabo pipe PP
- Prestabo / -XL
- Prestabo, PP coated

Megapress
Combination with thick-walled steel pipes according to DIN EN 10 220 / 10 255, d 21.3–60.3 mm

Pipe shells and mats for fire protection constructions

The following notes have to be observed for mounting the pipeline and pipe shells.

The following mineral wool insulation materials can be used for fire protection solutions:

- Pipe shell 800, Klimarock, Hvac, U Protect Section Alu2, HPS035 AluR and Steinwool Isolierschale Alu
- Lay the pipelines as specified by the manufacturer.
- Fasten the pipelines as specified in the general building inspectorate test certificate.
  - Floor lead-ins at least 600 mm above the ceiling
  - Wall lead-ins at least 500 mm in front of and behind the wall
- Butt joints of the pipe shells/mats can be arranged at will.
- Fastening of pipe shell/matt with galvanised binding wire d ≥ 0.7 mm, 6 windings/m as specified by the manufacturer

The pipe shells/mats are mounted as specified in the general building inspectorate test certificate P-2400/003/15-MPA BS.

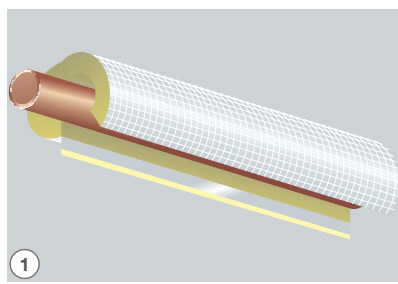

Fig. 2 – 138

Arrange the pipe shell around the pipe and close it.

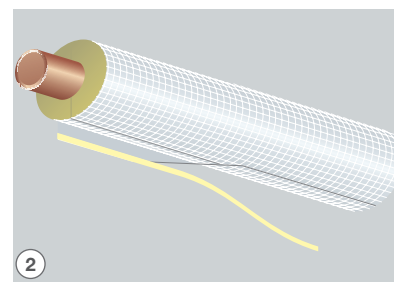

Fig. 2 – 139

Remove the protective strip and tape it.

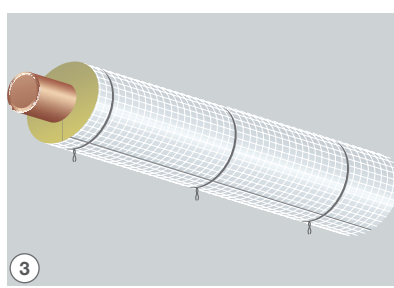

Fig. 2 – 140

Fix the shell with galvanised binding wire d ≥ 0.7 mm.

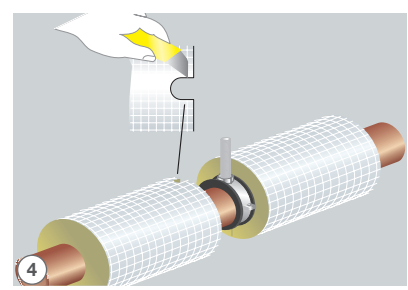

Fig. 2 – 141

Pipe shell adaptation example

The illustrations show only the insulation required for the fire protection solution. In front of and behind, any insulation of min. B2 may be used or dropped completely.

Floor lead-in

Profipress/Profipress with Smartloop Inliner circulation

■ Solid ceiling ≥ 150 mm

Viega pipe system	Pipe material	Outside diameter [mm]	Wall thickness [mm]	Insulation thickness [mm]	Insulation length [mm]	Classification
Profipress Profipress-XL Profipress G Profipress G XL Profipress S	Copper	≤ 28	≥ 1.0	20 – 40	2000	R 30 R 60 R 90
		> 28 to ≤ 42	≥ 1.2	20 – 40		
		> 42 to ≤ 54	≥ 1.5	20 – 100		
		> 54 to ≤ 88.9	≥ 2.0	30 – 100		
		> 88.8 to ≤ 108.0	≥ 2.5	30 – 80		
Profipress with Smartloop Inliner circulation	Copper / PB-pipe	28	≥ 1.0	20 – 40		
		> 28 to ≤ 35	≥ 1.2	20 – 40		

Table 2 – 33 Profipress/Profipress with Smartloop Inliner circulation

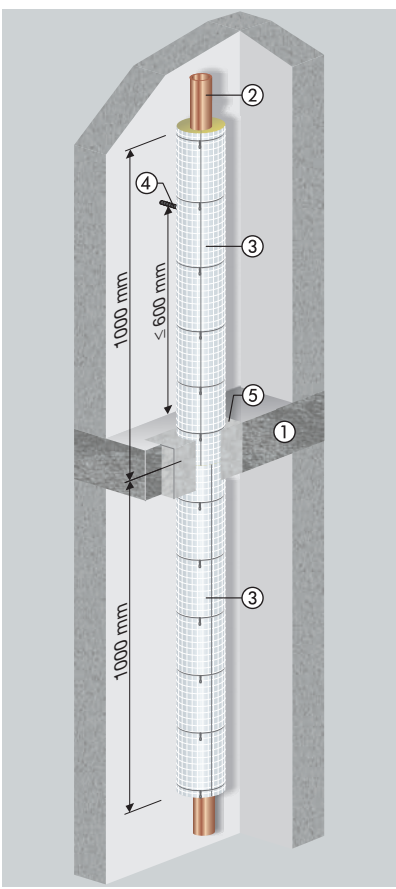

Fig. 2 – 142

① Fire-resistant solid ceiling ≥ 150 mm of concrete/reinforced concrete according to DIN 1045 or aerated concrete according to DIN 4223

② Viega pipe systems
Profipress
Profipress with inner circulation pipe

③ Various insulations

④ Pipe fastener

⑤ Gaps sealed with concrete, mortar, gypsum, Viega fire protection filler or mineral wool sealed with filler.

Viega general building inspectorate test certificate
P-2400 / 003 / 15-MPA BS

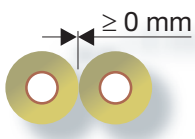

Pipes can be laid with zero distance.

Sanpress/Sanpress Inox/Sanpress Inox with Smartloop Inliner circulation

■ Solid ceiling ≥ 150 mm

Viega pipe system	Pipe material	Outside diameter [mm]	Wall thickness [mm]	Insulation thicknesses [mm]	Insulation lengths [mm]	Classification
Sanpress Sanpress-XL Sanpress Inox Sanpress Inox XL Sanpress Inox G Sanpress Inox G XL	Stainless steel 1.4401 or 1.4521	≤ 18	≥ 1.0	20	1000	R 30 R 60 R 90
		> 18 to ≤ 22	≥ 1.2	20		
		> 22 to ≤ 28	≥ 1.2	20		
		> 28 to ≤ 42	≥ 1.5	20 – 40		
		> 42 to ≤ 54	≥ 1.5	20 – 60		
		> 54 to ≤ 64.0	≥ 2.0	20 – 60		
		> 64 to ≤ 76.1	≥ 2.0	30 – 80		
		> 76.1 to ≤ 108.0	≥ 2.0	30 – 100		
Sanpress Inox with Smartloop Inliner circulation	Stainless steel/ Smart-loop PB-pipe	28	≥ 1.0	20 – 40		
		> 28 to ≤ 35	≥ 1.2	20 – 40		

Table 2 – 34 Sanpress/Sanpress Inox/Sanpress Inox with Smartloop Inliner circulation

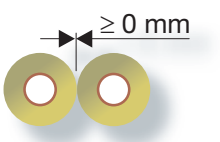

Pipes can be laid with zero distance.

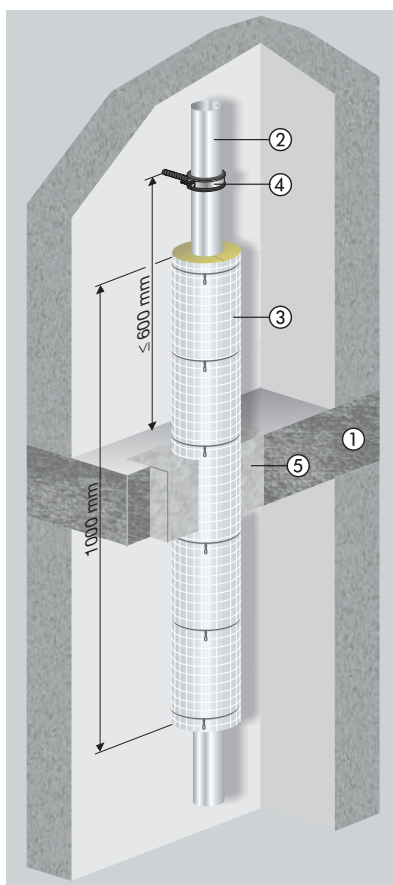

Fig. 2 – 143

① Fire-resistant solid ceiling ≥ 150 mm of concrete and/or reinforced concrete according to DIN 1045 or aerated concrete according to DIN 4223

② Viega pipe systems
Sanpress
Sanpress Inox with inner circulation pipe

③ Various insulations

④ Pipe fastener

⑤ Gaps sealed with concrete, mortar, gypsum, Viega fire protection filler or mineral wool sealed with filler.

Viega general building inspectorate test certificate
P-2400/003/15-MPA BS

Prestabo/Prestabo PP coated

■ Solid ceiling ≥ 150 mm

Viega pipe system	Pipe material	Outside diameter [mm]	Wall thickness [mm]	Insulation thicknesses [mm]	Insulation lengths [mm]	Classification
Prestabo Prestabo-XL	Carbon steel 1.0308 galvanised on the outside	≤ 18	≥ 1.2	20–40	1000	R 30 R 60 R 90
		> 18 to ≤ 54	≥ 1.5	20–60		
		> 54 to ≤ 64.0	≥ 2.0	20–100		
		> 64 to ≤ 76.1	≥ 2.0	30–100		
		> 76.1 to ≤ 108.0	≥ 2.0	40–100		
Prestabo Prestabo-XL	Carbon steel 1.0215 galvanised on the outside and inside	≤ 54	≥ 1.5	20–60		
		> 54 to ≤ 76.1	≥ 2.0	30–100		
		> 76.1 to ≤ 108.0	≥ 2.0	40–100		
Prestabo, PP coated	Carbon steel 1.0308 with 1 mm PP-jacket	≤ 18	≥ 1.2	20		
		> 18 to ≤ 54	≥ 1.5	20–60		

Table 2 – 35 Prestabo/Prestabo PP

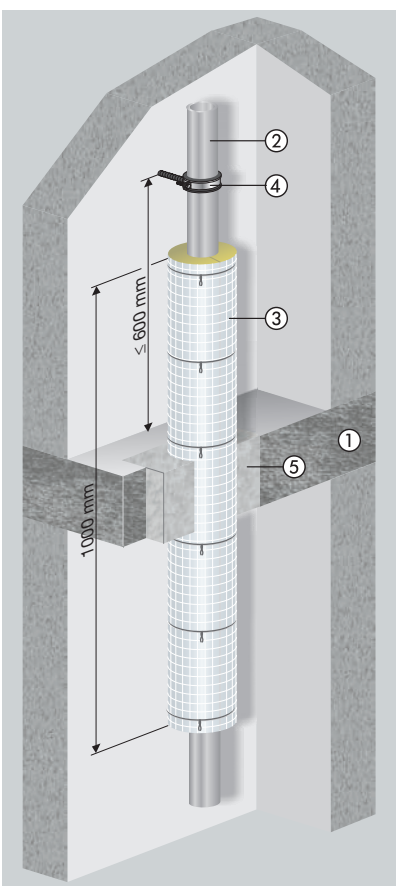

Fig. 2 – 144

① Fire-resistant solid ceiling ≥ 150 mm of concrete and/or reinforced concrete according to DIN 1045 or aerated concrete according to DIN 4223

② Viega Prestabo pipe system

③ Various insulations

④ Pipe fastener

⑤ Gaps sealed with concrete, mortar, gypsum, Viega fire protection filler or mineral wool sealed with filler.

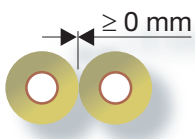

Pipes can be laid with zero distance.

Viega general building inspectorate test certificate
P-2400/003/15-MPA BS

Megapress

■ Solid ceiling ≥ 150 mm

Viega pipe system	Pipe material	Outside diameter [mm]	Wall thickness [mm]	Insulation thicknesses [mm]	Insulation lengths [mm]	Classification
Megapress Megapress G	Steel pipe DIN EN 10 220 DIN EN 10 255	≤ 21.3	≥ 2.0	20 – 40	1000	R 30 R 60 R 90
		≤ 26.9	≥ 2.3			
		≥ 33.7 to ≤ 48.3	≥ 2.6	20 – 60		
		≤ 60.3	≥ 2.9			

Table 2 – 36 Megapress

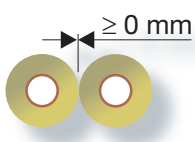

Pipes can be laid with zero distance.

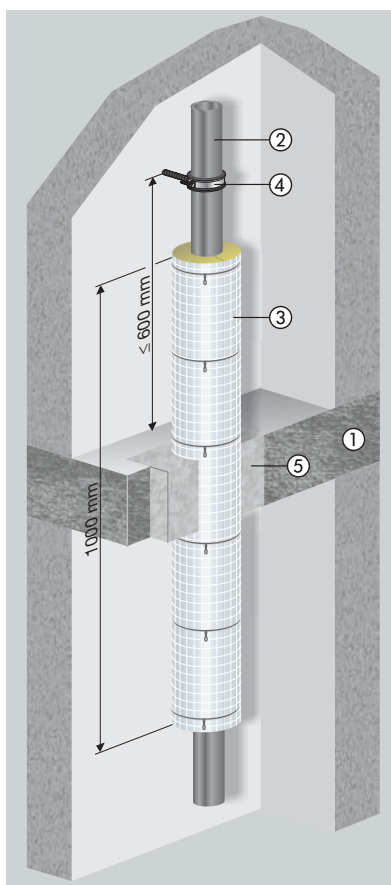

Fig. 2 – 145

① Fire-resistant solid ceiling ≥ 150 mm of concrete and/or reinforced concrete according to DIN 1045 or aerated concrete according to DIN 4223

② Viega Megapress pipe system

③ Various insulations

④ Pipe fastener

⑤ Gaps sealed with concrete, mortar, gypsum, Viega fire protection filler or mineral wool sealed with filler.

Viega general building inspectorate test certificate
P-2400 / 003 / 15-MPA BS

One-side insulation

Radiator connection, further combustible insulation

Radiator connection, further combustible insulation – floor lead-in solid ceiling ≥ 150 mm

Viega pipe system	Pipe material	Outside diameter [mm]	Wall thickness [mm]	Insulation thickness [mm]	Insulation length [mm]
Profipress Profipress with Inliner	Copper	≤ 28	≥ 1.0	20	≥ 2000
Sanpress Sanpress Inox also with Inliner	Stainless steel 1.4401 1.4521	≤ 18	≥ 1.0	20	
		> 18 to ≤ 22	≥ 1.2		
		> 22 to ≤ 28	≥ 1.2		
		> 28 to ≤ 54	≥ 1.5	20 – 50	
Prestabo Prestabo PP	Carbon steel 1.0308 1.2015	≤ 18	≥ 1.2	20	
		> 18 to ≤ 28	≥ 1.5		
		> 28 to ≤ 54		20 – 50	
Megapress	Steel pipe DIN EN 10 220 DIN EN 10 255	≤ 21.3	≥ 1.2	20	
		≤ 26.9	≥ 1.2		
		≥ 33.7 to ≤ 48.3	≥ 1.5	20 – 50	
		> 48, 3.7 to ≤ 54	≥ 1.5		

Table 2 – 37

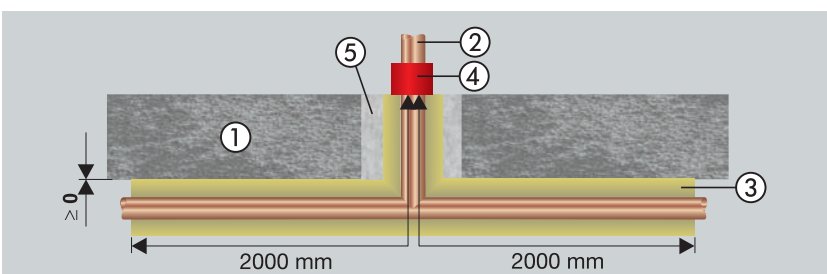

Fig. 2 – 146

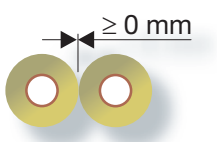

Pipes can be laid with zero distance.

Key

Fig. 2 – 146 to Fig. 2 – 150

1. Fire-resistant solid ceiling ≥ 150 mm of concrete/reinforced concrete according to DIN 1045 or aerated concrete according to DIN 4223
2. Viega pipe system according to table 1-9
3. Rockwool 800 or Paroc Hvac
4. Combustible insulation min. B2 e.g. Climaflex stabil NMC
5. Gap sealed with concrete or mortar
6. Compensating insulation – at least normally flammable
7. Footfall sound insulation – at least normally flammable
8. Screed or dry screed, thickness ≥ 25 mm

Viega general building inspectorate test certificate
P-2400/003/15-MPA BS

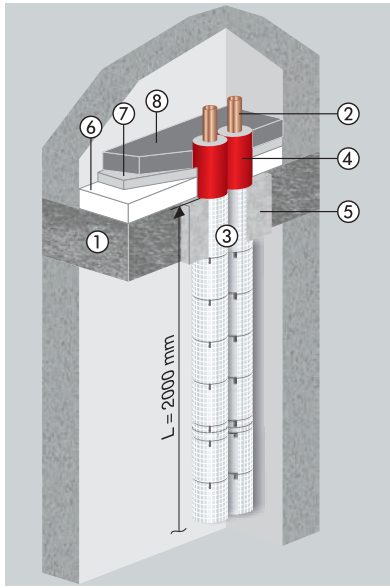

Fig. 2 – 147

Direct radiator connection

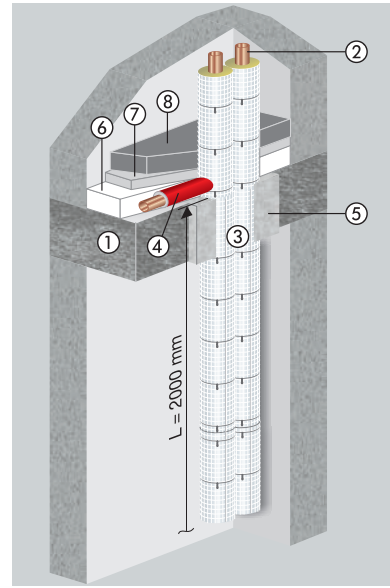

Fig. 2 – 148

Combustible insulation for connection lines

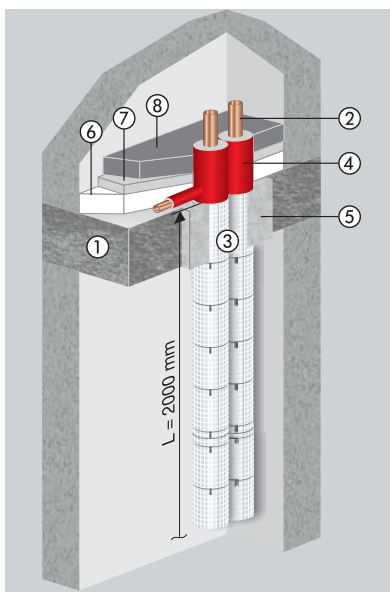

Fig. 2 – 149

Combustible insulation above the ceiling

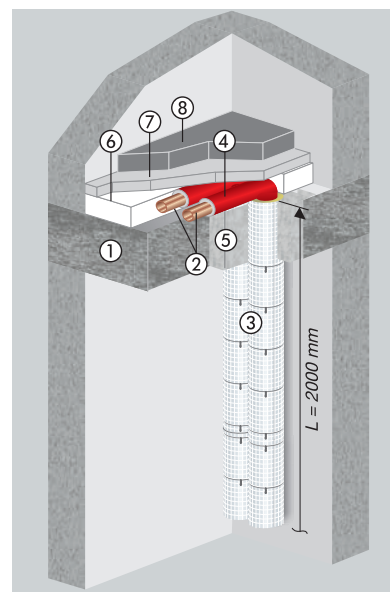

Fig. 2 – 150

Combustible insulation above the ceiling – distortion in the floor construction

Viega general building inspectorate test certificate
P-2400/003/15-MPA BS

Viega Smartpress / Sanfix Fosta
d ≤ 32 mm

Viega Smartpress/Sanfix Fosta – floor lead-in solid ceiling ≥ 150 mm

Viega pipe system	Material	d_a [mm]	Wall thickness [mm]	Insulation thicknesses [mm]	Insulation lengths [mm]
Viega Smartpress	PE-Xc / Al / PE-Xc	16	2.2	20	≥ 150 and/or of floor thickness
		20	2.8		
Sanfix Fosta		25	2.7		
		32	3.2		

Table 2 – 38

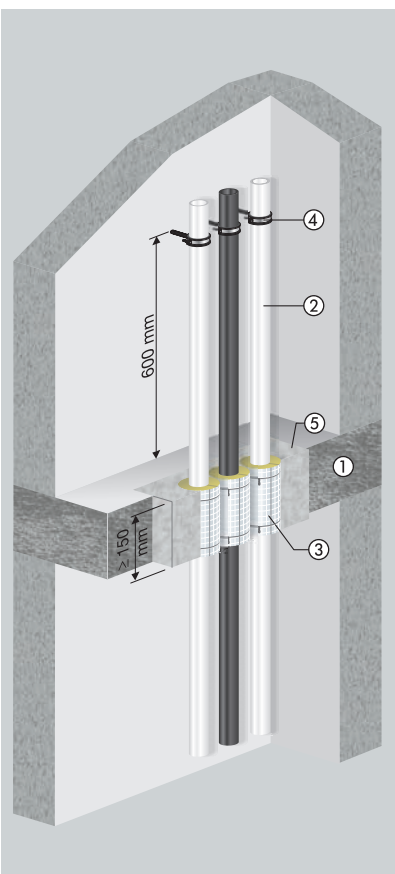

Fig. 2 – 151

① Fire-resistant solid ceiling ≥ 150 mm of concrete and/or reinforced concrete according to DIN 1045 or aerated concrete according to DIN 4223

② Viega pipe systems Viega Smartpress / Sanfix Fosta

③ Rockwool 800, L = ≥ 150 mm

④ Pipe fastener

⑤ Gaps sealed with concrete, mortar, gypsum, Viega fire protection filler or mineral wool sealed with filler.

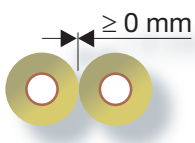

Plastic pipes can be laid with zero distance.

Viega general building inspectorate test certificate
P-2400/003/15-MPA BS

Viega Smartpress / Sanfix Fosta

One-side insulation – z. B. radiator connection, solid ceiling ≥ 150 mm

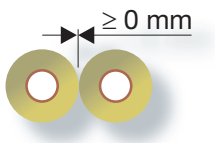

Pipes can be laid with zero distance.

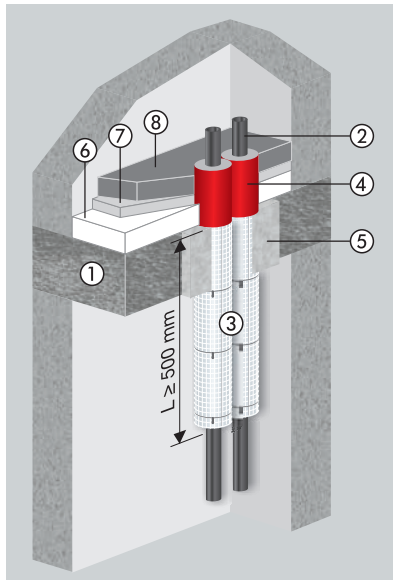

Fig. 2 – 152

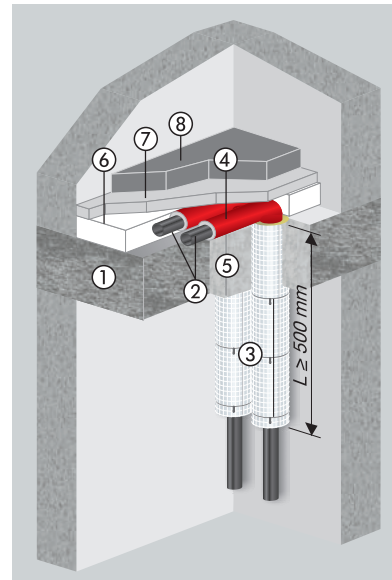

Fig. 2 – 153

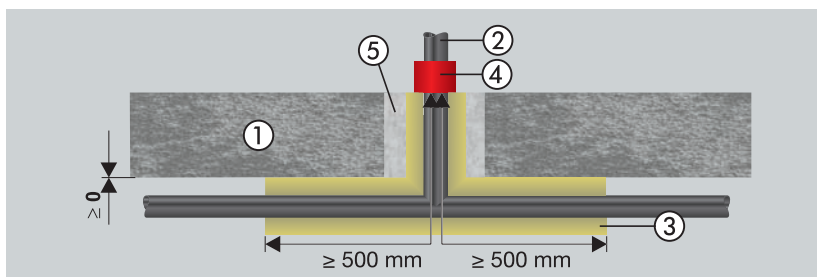

Fig. 2 – 154

1. Fire-resistant solid ceiling ≥ 150 mm of concrete/reinforced concrete according to DIN 1045 or aerated concrete according to DIN 4223
2. Viega pipe system Viega Smartpress / Sanfix Fosta ≤ 63 mm
3. Rockwool 800 or Paroc Hvac
4. Combustible insulation min. B2 e.g. Climaflex stabil NMC
5. Gaps sealed with concrete, mortar, gypsum, Viega fire protection filler or mineral wool sealed with filler.
6. Compensating insulation – at least normally flammable
7. Footfall sound insulation – at least normally flammable
8. Screed or dry screed, thickness ≥ 25 mm

Viega general building inspectorate test certificate:
P-MPA-E-09-005, P-2400/003/15-MPA BS

Zero distances – in the Viega system

Viega press connector systems with each other

Viega press connector systems among each other – zero distances in solid ceiling ≥ 150 mm

Viega pipe system	Profipress d 12–108.0	Viega Smartpress / Sanfix Fosta d 16–63	Sanpress / Sanpress Inox d 12–108.0	Prestabo d 12–108.0	Megapress d 21.3–60.3
Profipress d 12–108.0	**Minimum distance of the fire protection isolation among each other 0 mm**				
Viega Smartpress/ Sanfix Fosta d 16–63					
Sanpress Sanpress Inox d 16–63					
Prestabo d 12–108.0					
Megapress d 21.3–60.3					
for Rockwool Conlit System[1] P-3725/4130 MPA BS					

Table 2 – 39

[1] Document 240006491-B MPA Erwitte

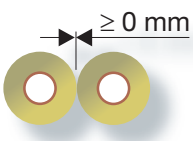

Pipes can be laid with zero distance.

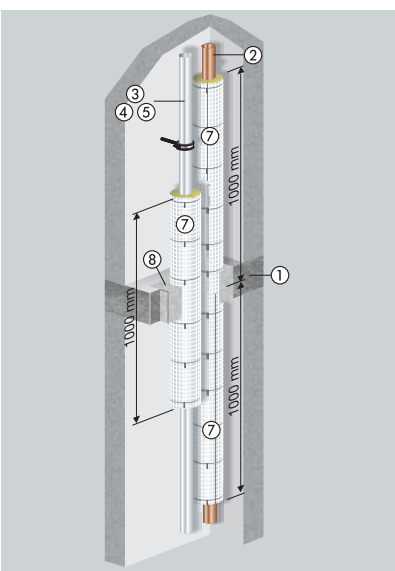

Fig. 2 – 155

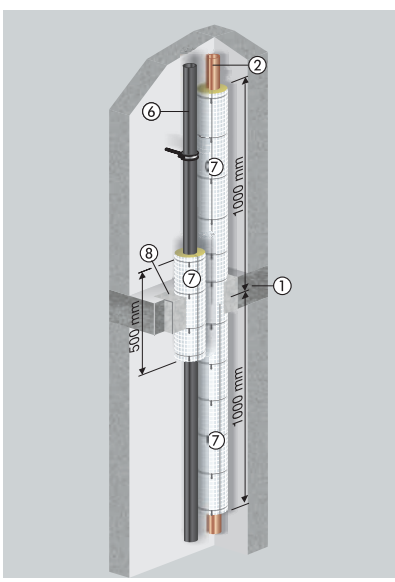

Fig. 2 – 156

1. Fire-resistant solid ceiling ≥ 150 mm of concrete/ reinforced concrete according to DIN 1045 or aerated concrete according to DIN 4223
2. Viega Profipress pipe systems, Profipress with inner circulation pipe
3. Sanpress / Sanpress Inox
4. Prestabo
5. Megapress
6. Viega Smartpress / Sanfix Fosta
7. Rockwool 800 or Paroc Hvac
8. Gaps sealed with concrete, mortar, gypsum, Viega fire protection filler or mineral wool sealed with filler.

Viega general building inspectorate test certificate:
P-MPA-E-09-005, P-2400/003/15-MPA BS

Zero distances – in the Viega system

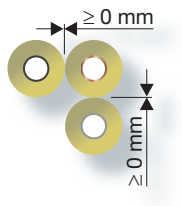

Pipes can be laid with zero distance.

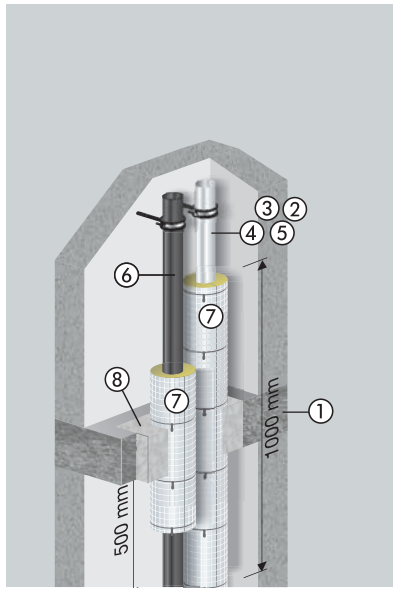

Fig. 2 – 157

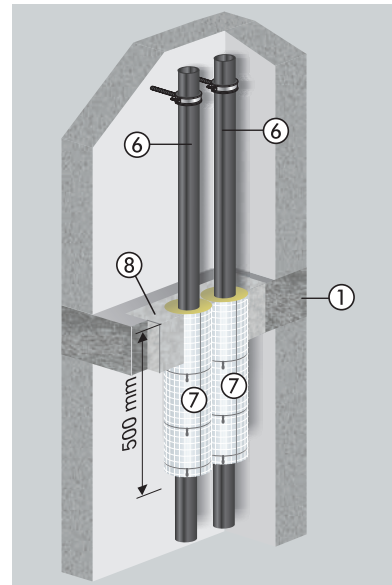

Fig. 2 – 158

Key

Fig. 2 – 157 to
Fig. 2 – 161

1. Fire-resistant solid ceiling ≥ 150 mm of concrete/reinforced concrete according to DIN 1045 or aerated concrete according to DIN 4223
2. Viega Profipress pipe systems, Profipress with inner circulation pipe L = 2000 mm; L/2 = 1000 mm
3. Pipe systems Sanpress / Sanpress Inox, Sanpress Inox with inner circulation pipe L = 1000 mm; L/2 = 500 mm
4. Viega Prestabo pipe system L = 1000 mm; L/2 = 500 mm
5. Viega Megapress pipe system L = 1000 mm; L/2 = 500 mm
6. Viega Smartpress / Sanfix Fosta pipe system L = 500 mm; L/2 = 250 mm
7. Rockwool 800 or Paroc Hvac
8. Gaps sealed with concrete, mortar, gypsum, Viega fire protection filler or mineral wool sealed with filler.

Viega general building inspectorate test certificate
P-2400 / 003 / 15-MPA BS

Viega general building inspectorate test certificate
P-MPA-E-09-005

Deflections and branches

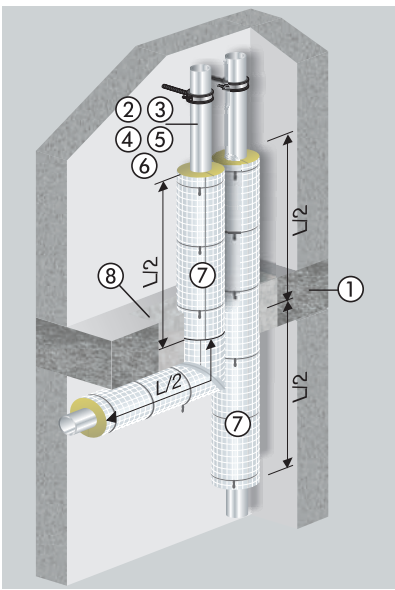

Fig. 2 – 159

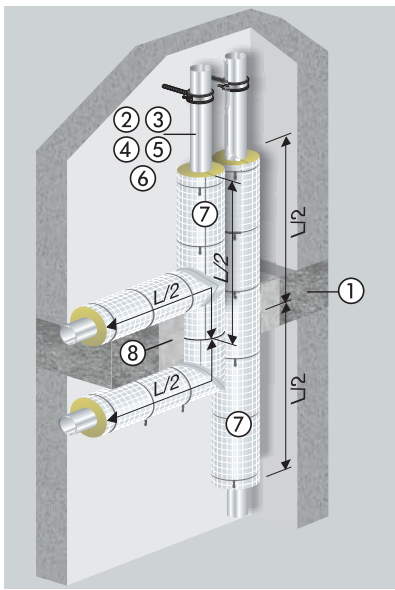

Fig. 2 – 160

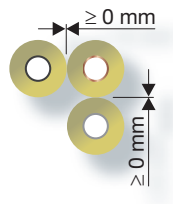

Pipes can be laid with zero distance.

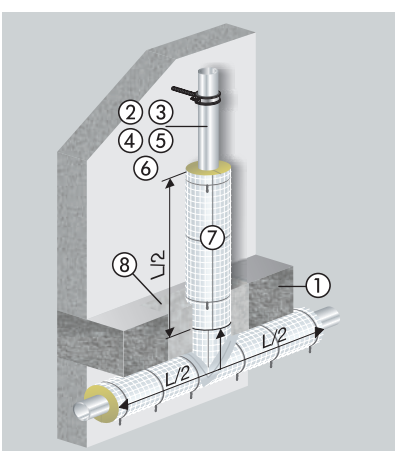

Fig. 2 – 161

Viega general building inspectorate test certificate
P-2400/003/15-MPA BS

Zero distances – Rockwool Conlit

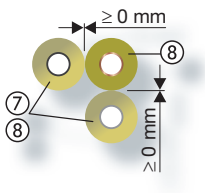

Pipes can be laid with zero distance.

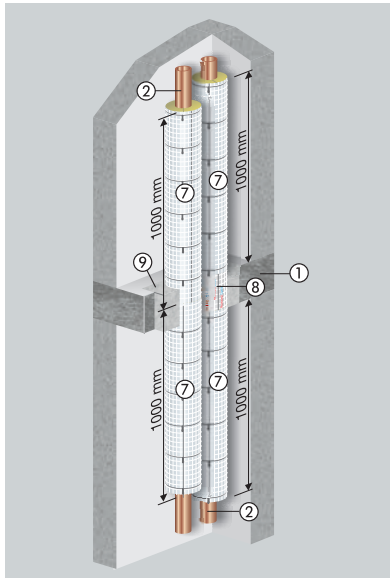

Fig. 2 – 162

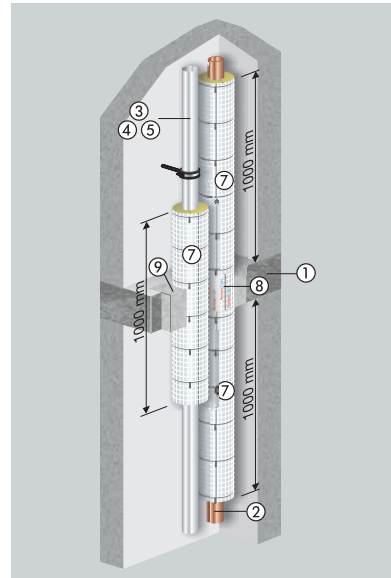

Fig. 2 – 163

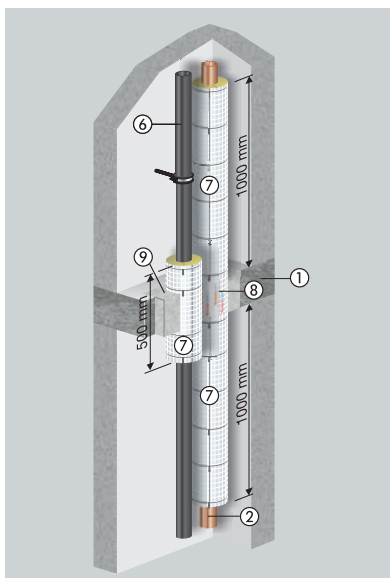

Fig. 2 – 164

1. Fire-resistant solid ceiling ≥ 150 mm of concrete/reinforced concrete according to DIN 1045 or aerated concrete according to DIN 4223
2. Viega Profipress pipe systems, Profipress with inner circulation pipe
3. Viega pipe systems Sanpress / Sanpress Inox with inner circulation pipe
4. Viega Prestabo pipe system
5. Viega Megapress pipe system
6. Viega pipe systems Viega Smartpress / Sanfix Fosta
7. Rockwool 800
8. Rockwool Conlit 150 U P-3725 / 4130-MPA BS
9. Gap sealed with concrete or mortar

Document Erwitte 240006491-B Erwitte

Sound protection in domestic technology

Acoustic assessment of the layout
Sound protection is not considered being only a protection of our health but more and more also a comfort and quality requirement for the living space. The acoustic success of a domestic system is much depending on the design of the entire building and in particular on the design of the layout. DIN 4109 defines the requirements and provides information on the acoustic assessment of the layout of living rooms and bedrooms, children's rooms, working rooms, offices and seminar rooms.

It has to be observed that rooms requiring sound protection are not arranged directly next to rooms with noise sources. The layout must be designed such that a room not requiring sound protection is located between the noise source and the neighbour flat.

Fig. 2 – 165 shows a layout that is unfavourable with regard to building acoustics; **Fig. 2 – 166** shows a layout favourable with regard to building acoustics.

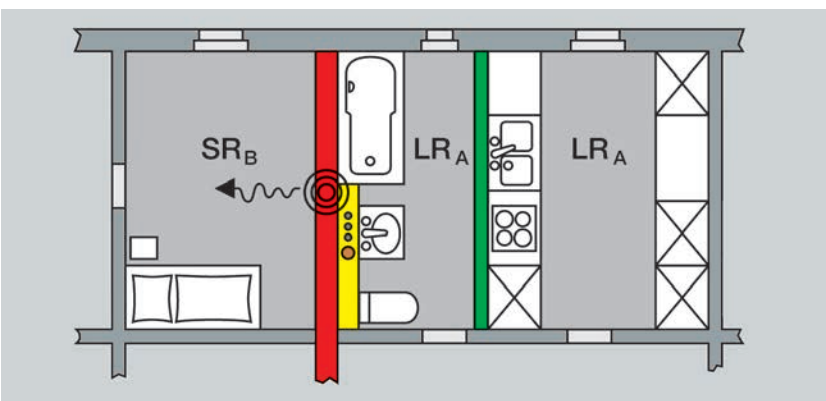

Fig. 2 – 165 Layout that is unfavourable with regard to building acoustics

LR_A Loud room (bathroom, WC, kitchen, etc.) flat A
SR_B Room requiring sound protection (living, sleeping, working room, etc.) flat B
Separating wall between flats, storey floor
Installation wall

Layout that is favourable with regard to building acoustics

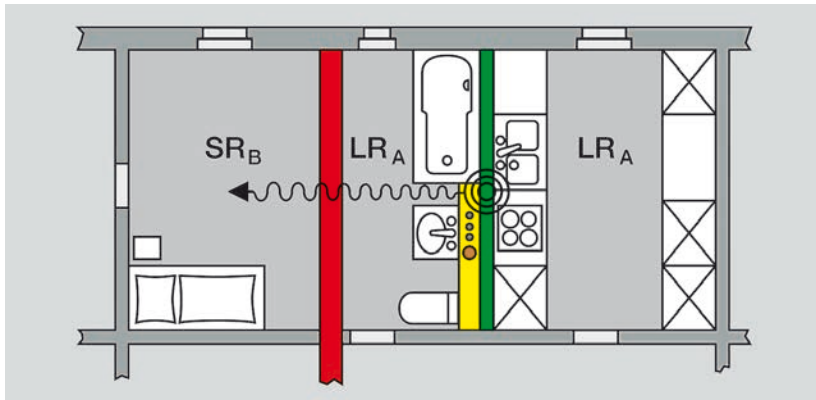

Fig. 2 – 166 Layout that is favourable with regard to building acoustics

LR_A Loud room (bathroom, WC, kitchen, etc.) flat A

SR_B Room requiring sound protection (living, sleeping, working room, etc.) flat B

Separating wall between flats, storey floor

Installation wall

Layout that is favourable with regard to building acoustics

Noise source in the partition

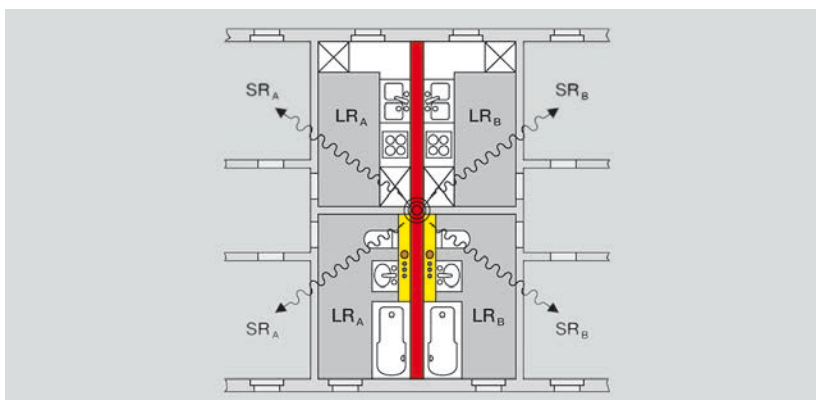

Fig. 2 – 167 Sound propagation pre-wall block

The same recommendations as for the mentioned partitions apply for storey floors.For the purpose the rooms requiring sound protection are reviewed diagonally downwards. **Fig. 2 – 166** shows a layout favourable with regard to building acoustics.For the determination of the sound level (L_{In}) in a test setup, the most unfavourable case is assumed; i.e. the room requiring sound protection is located diagonally below the noise source.

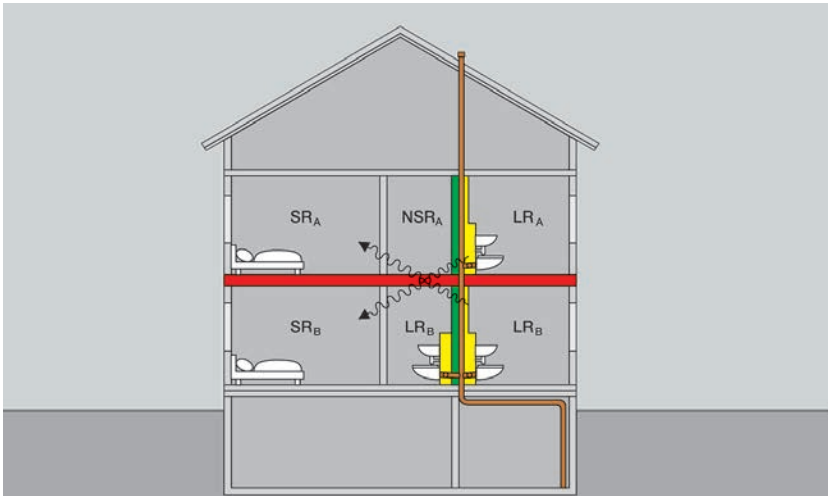

Fig. 2 – 168 Sound propagation through the storey floor

Layout that is favourable with regard to building acoustics

LR_A Loud room (bathroom, WC, kitchen, etc.) flat A

SR_B Room requiring sound protection (living, sleeping, working room, etc.) flat B

NSR_A Room not requiring sound protection

Partition, storey floor

Installation wall

The sound protection requirements for technical building systems including water supply and wastewater systems made in DIN 4109/A1 are the minimum requirements only. If the building owner desires higher sound protection requirements, these need to be included in the contract for work and services as an additional provision under private law. It is recommended in this case tasking a sound protection expert for planning and implementation of all building services concerned.
All Viega pre-wall systems had been tested by the Fraunhofer Institute for Building Physics, Stuttgart.

Sound protection requirements of the regulations [dB]

	DIN 4109 / A1	DIN 4109 supplement 2	VDI 4100 SST II Apartment building	VDI 4100
Diagonal transmission path external, room requiring sound protection	≤ 30	≤ 25	≤ 27	≤ 24
Horizontal transmission path, own area	No requirements	No requirements	≤ 35	≤ 30

Table 2 – 40

DIN 4109 does not refer to usage sounds (actuation sounds). If higher requirements are made, it is recommended using the Viega sound insulation element model 8310.52 reducing usage sounds by up to 5 dB(A).

Dry constructions variants have clear advantages over pre-wall installations with masonry. The sound levels measured in diagonal directions for the dry construction variants are lower. Thorough sound insulation of the pipelines is mandatory in wet construction and consequently increases the mounting expenditure and the costs.

Further limitations for wet-bricked pre-wall installations

- Acoustic proof of suitability of the pre-wall installation and the masonry must be available for installation walls of mass < 220 kg/m^2.
- If the structural engineer introduced a light-wall surcharge, the principle of masonry must not be applied.

Recommendation: Use acoustically optimised dry construction variants of Viega pre-wall systems for the complex sound protection tasks!

Practical tips

Fundamental installation rules

- Fixing must always be made on the raw concrete and acoustically disconnected from the floating screed.
- After professional installation has been completed, it happens quite often that defects are caused by the negligence of subsequent work activities. All those involved in construction and in particular the site management have the obligation according to VOB to point out such deficiencies.

Acoustic proof of suitability

DIN 4109 / A1 (01/2001) requires the planning specialist to prepare an »acoustic proof of suitability« for the following products:

- Pre-wall installation systems in wet or dry construction
- Installation systems inside metal support profiles

Easy planning due to acoustic test certificates

The »Acoustic test certificates« of the manufacturers can be used as acoustic proofs of suitability. Deviating walls have to be converted to the area-related masses of the walls.

Products not having recognised acoustic test certificates should not be included in calls for tenders and not be installed. The planner/installer is liable for the acoustic suitability of the products if these are used in contrary to the call for tender and the proof of suitability.

Sound protection certificates for Viega pre-wall systems
Pre-wall installation at solid wall

Installation wall sand-lime brick 11.5 cm with area-related mass m“w = 220 kg/m^2 R’w=47 [dB], insulation according to DIN 1988-200

Measured values on the flush-stop function basis

Steptec at solid wall

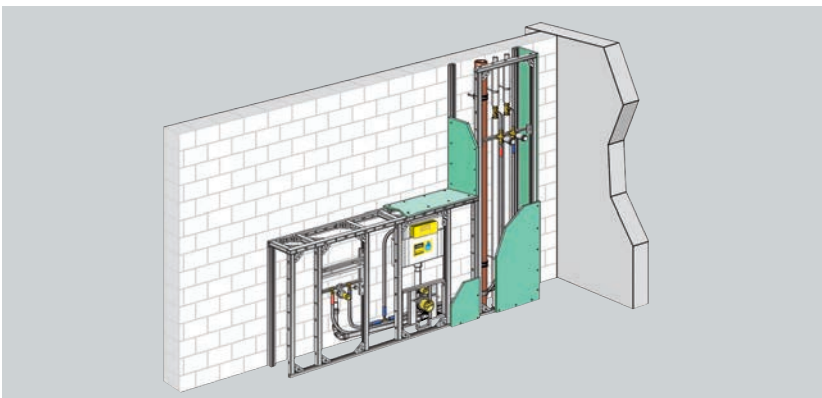

Fig. 2 – 169 Steptec – solid wall

Installation sound level – requirements solid wall

	Installation sound level	DIN 4109	DIN 4109 supplement 2
	L_{In} [dB(A)]		
Diagonal transmission path external, room requiring sound protection	19	≤ 30 complied with	≤ 25 complied with
Horizontal transmission path, own area	26	No requirements	

Table 2 – 41

Viega Eco Plus at solid wall

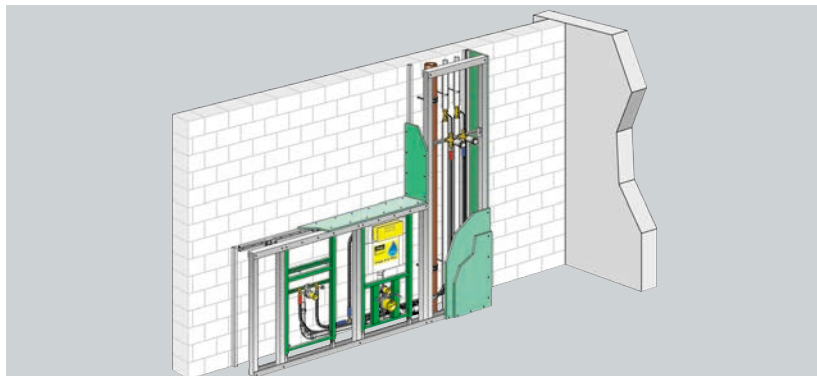

Fig. 2 – 170 Viega Eco Plus – solid wall

Installation sound level – requirements solid wall

	Installation sound level	DIN 4109	DIN 4109 supplement 2
		L_{In} [dB(A)]	
Diagonal transmission path external, room requiring sound protection	20	≤ 30 complied with	≤ 25 complied with
Horizontal transmission path, own area	28	No requirements	

Table 2 – 42

Viega Mono at solid wall

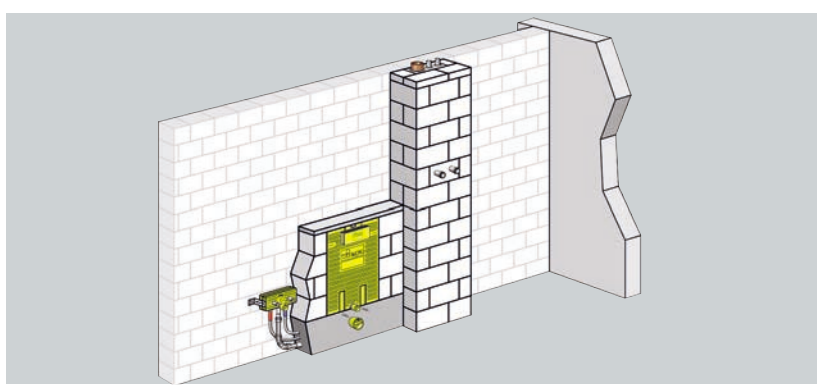

Fig. 2 – 171 Viega Mono – solid wall

Installation sound level – requirements solid wall

	Installation sound level	DIN 4109
	L_{In} [dB(A)]	
Diagonal transmission path external, room requiring sound protection	27	≤ 30 complied with
Horizontal transmission path, own area	36	No requirements

Table 2 – 43

Steptec installation wall

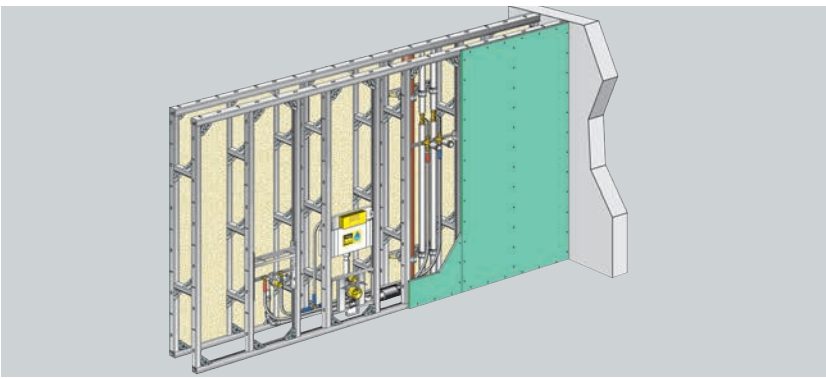

Fig. 2 – 172 Steptec installation wall

R'_w=52 [dB]

Insulation according to DIN 1988-200

Measured values on the flush-stop function basis

Installation sound level – requirements solid wall

	Installation sound level	DIN 4109	DIN 4109 supplement 2
		L_{In} [dB(A)]	
Diagonal transmission path external, room requiring sound protection	16	≤ 30 complied with	≤ 25 complied with
Horizontal transmission path, own area	20	No requirements	

Table 2 – 44

Viega Eco Plus at lightweight construction wall Knauf W 116

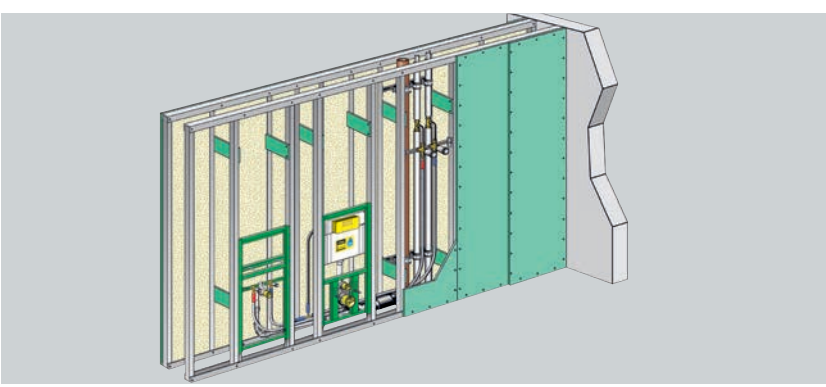

Fig. 2 – 173 Viega Eco Plus in installation wall

R'_w = 54 [dB]

Insulation according to DIN 1988-200

Measured values on the flush-stop function basis

Installation sound level – requirements solid wall

	Installation sound level	DIN 4109	DIN 4109 supplement 2
		L_{In} [dB(A)]	
Diagonal transmission path external, room requiring sound protection	21	≤ 30 complied with	≤ 25 complied with
Horizontal transmission path, own area	29	No requirements	

Table 2 – 45

Steptec at lightweight construction wall Knauf W112

R'w = 49 [dB]

Insulation according to DIN 1988-200

Measured values on the flush-stop function basis

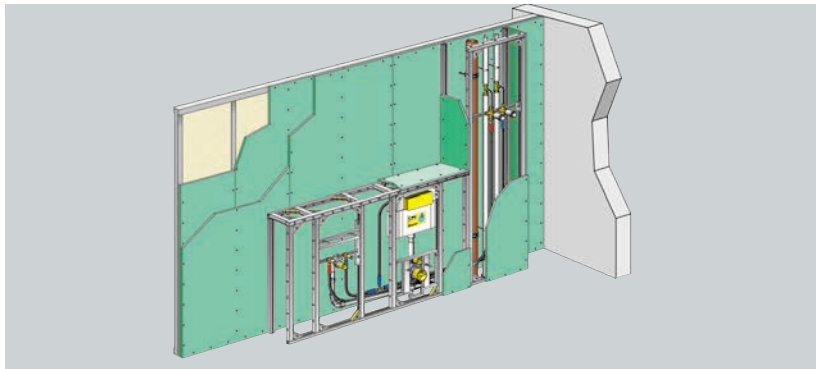

Fig. 2 – 174 Pre-wall installation in lightweight construction wall

Installation sound level – requirements solid wall

	Installation sound level	DIN 4109	DIN 4109 supplement 2
		L_{In} [dB(A)]	
Diagonal transmission path external, room requiring sound protection	18	≤ 30 complied with	≤ 25 complied with
Horizontal transmission path, own area	22	No requirements	

Table 2 – 46

Viega Eco Plus at lightweight construction wall

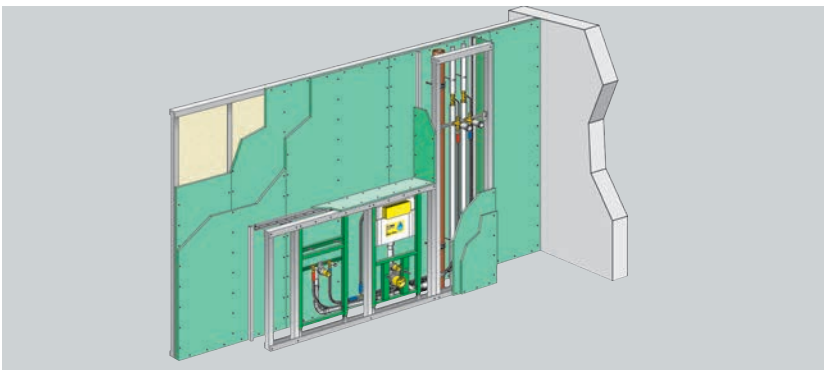

Fig. 2 – 175 Viega Eco Plus in lightweight construction wall

R'w = 49 [dB]

Insulation according to DIN 1988-200

Measured values on the flush-stop function basis

Installation sound level – requirements solid wall

	Installation sound level	DIN 4109	DIN 4109 supplement 2
		L_{In} [dB(A)]	
Diagonal transmission path external, room requiring sound protection	23	≤ 30 complied with	≤ 25 complied with
Horizontal transmission path, own area	31	No requirements	

Table 2 – 47

Dry construction – processing instructions

Gypsum plaster boards

The brochure of the Federal Working Group Dry Construction »Bathrooms constructed using dry construction« gives the following information:
»For simple cladding using gypsum plaster boards of the thickness of less than 20 mm; the distance of the supports should be reduced to 500 mm and less, with regard to the ceramic cladding to be applied later on.«
Pre-wall installation systems Steptec meet this requirement by the respective distances of the axes.
They offer a safe sub-constructions for ceramic claddings. According to DIN 4102 »Fire behaviour of building materials and building components« these panels do not belong to the combustible materials of building material fire rating class A 2 if the surface is closed for example by tiling.

IFGP cladding panels

- Gypsum plasterboards impregnated to prevent absorption of humidity (IFGP) must be used for rooms with wet loads, e.g. privately used bathrooms.
  Viega offers three equipment variants of Steptec IFGP cladding panels:
  - Without openings – 1500 x 1000 x 12.5 mm
    model 8055.10
  - With openings for Visign 2H concealed cistern – 1250 x 470 x 12.5 mm
    model 8040.10
  - With openings for Visign 2L concealed cistern – 1250 x 470 x 12.5 mm
    model 8050.0

- Pipelines should always be installed with acoustic insulation to prevent that the sounds from the installation are transmitted. Viega pre-wall elements and modules are delivered with sound-protected fixing elements for wall plates that should be used obligatorily.
- If Viega installation walls shall be constructed with tileable surfaces according to quality level 1, leaflet 2 of the Gypsum Plasterboards Industry Association, filler with a glass fibre component should be used. For example Viega filler, model 8480.
- Joints towards the installation body should be sealed with a permanently elastic fungicide joint material.

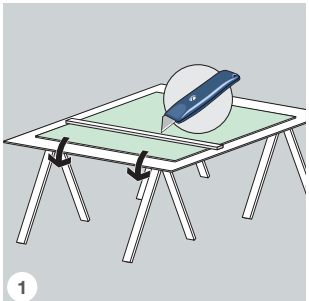

Fig. 2 – 176

Cut the panels to size and trim the edges.

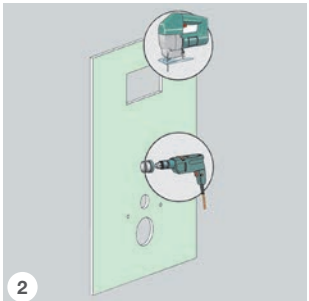

Fig. 2 – 177

Cut out the openings.

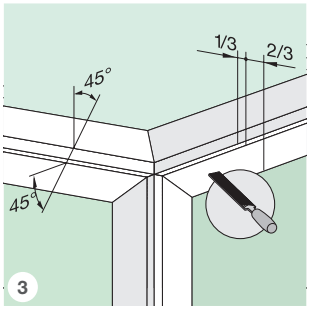

Fig. 2 – 178

Chamfer edges 45°.

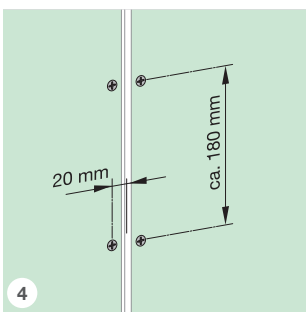

Fig. 2 – 179

Observe distances for drywall screws.

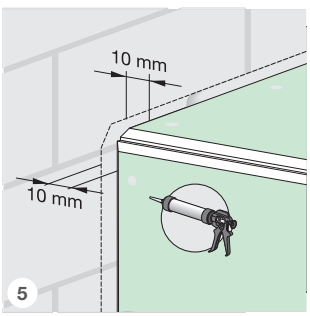

Fig. 2 – 180

Seal wall and floor connections with a permanently elastic fungicide joint material.

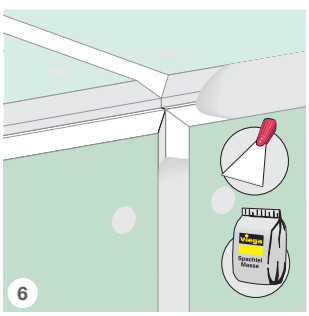

Fig. 2 – 181

Fill abutting edges with filler.

Aqua-CS cladding panels
Aqua-CS cladding panels should be used for areas with higher wet loads (swimming pools, sports facilities). These are cladding panels made of calcium silicate with a high water resistance. In these cases gypsum plasterboards cannot be used.

Notes on processing Aqua-CS cladding panels
- Store the cladding panels in a dry and frost-free place.
- Make sure that continuous surface sealing is provided.
- Seal the joints between the Aqua-CS cladding panels and towards the installation body with permanently elastic material.
- Ensure that appropriate waterproofing is maintained.

Waterproofing
Gypsum plaster boards should not be used for private bathrooms. Impregnated gypsum plaster boards (IFGP) should be used. The following applies for processing:
- Seal fitting openings and joints in shower and bathtub areas particularly careful.
- Provide Viega Steptec modules with prefabricated sealing collars. Seal gap between fitting opening and tile with sanitary silicone.

This allows the installer to complete an optimal interface in consultation with the tiler.

When considering hygiene in sanitary rooms as a whole under health aspects, it is also necessary considering the hygiene of the surrounding surfaces of a sanitary room (see Fig. 2 – 182):
- Prevention of moisture penetration of components by using surface sealing ⑦
- Professional sealing of fittings of flush plates of WC and urinal ①②③⑧⑨
- Professional sealing of component connections ④⑤⑥

Professional sealing and using drywall construction materials prevent that humidity ingresses in components. These measures prevent hidden pollution loads. Compliance with the »hygienic precautions« is the ongoing task of professional planning and implementation in the building.

Waterproofing of a pre-wall installation

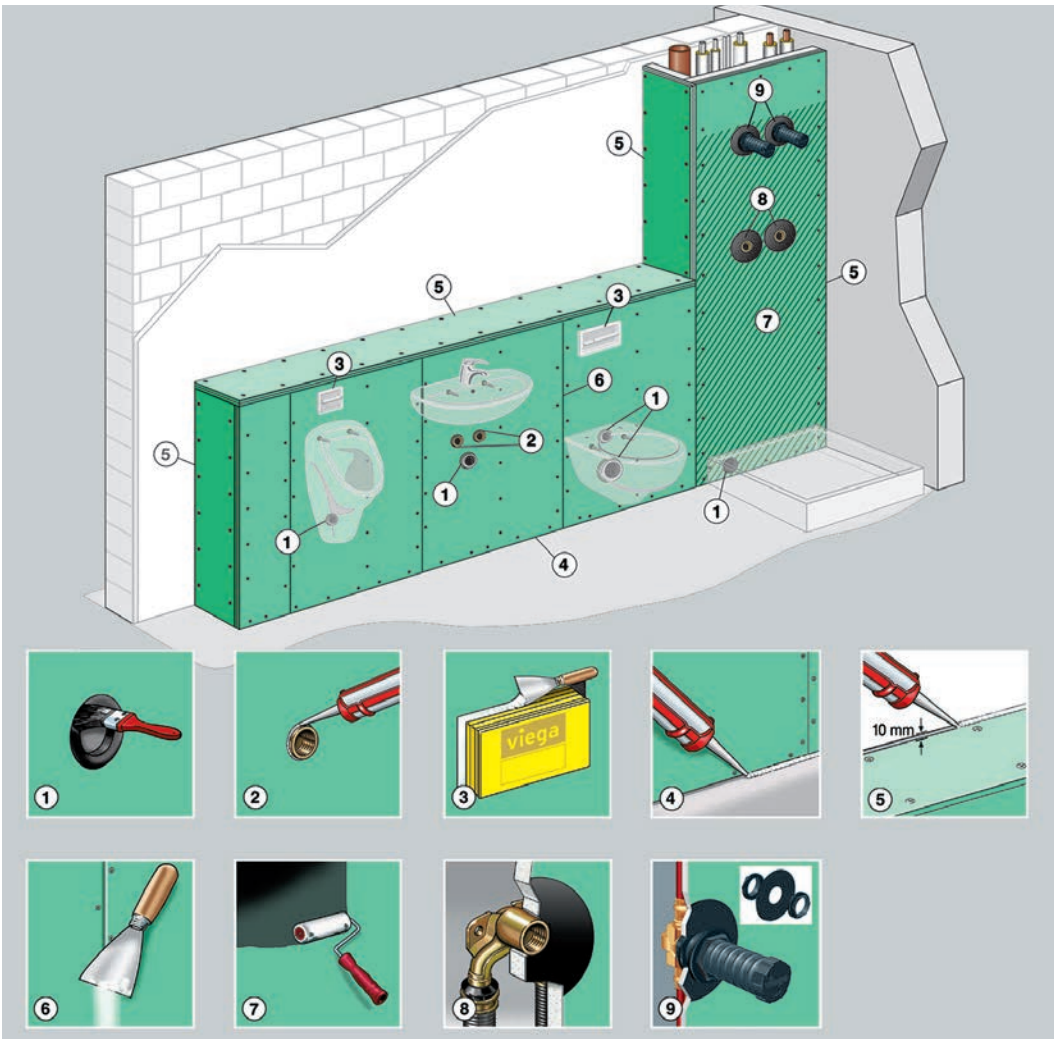

Fig. 2 – 182 Waterproofing – processing instructions

PLASTIC PIPING SYSTEMS 1

PRE-WALL TECHNOLOGY 2

DRAINAGE TECHNOLOGY 3

DRAINAGE TECHNOLOGY

Fundamentals

Drainage systems have to satisfy the following fundamental functional and hygienic requirements:

- All components of the installation have to be water- and gas-tight – sewer gas may not get into the building.
- Objects located below the backflow level must be protected from flooding.
- It must be prevented and/or delayed that fires can spread in neighbouring rooms through wall and floor breakthroughs.

Viega products are designed for domestic applications and not suitable for the introduction of abrasive and chemically aggressive liquids.

Intended use

The drainage components in this chapter have quite different functions and areas of application, therefore the detailed instructions for use accompanying the products have to be observed.
The materials used are always suitable for loads typical in domestic use only.

Limitations of use

- Only wastewater common in domestic use with the maximum temperature exceeding 95 °C for a short time must be drained via the odour traps.
- No chemical cleaning agents may be used to remove blockages in pipes.
- Cleaning of surfaces with chrome or paint coatings may only be carried out using mild cleaning agents.
- Backflow traps may be used only in the areas of application applicable for them.

The use of the drainage technology products for areas of application other than those described in this chapter must be approved by Viega Service Center.

Regulations and standards

The most important information on the professional use of mechanical components are given in the following regulations:

- DIN EN 274 Waste fittings for sanitary appliances
- DIN EN 1253 Gullies for buildings
- DIN EN 124 Gully tops and manhole tops for vehicular and pedestrian areas

Electrical equipment

- VDE 0100 part 701 Low-voltage electrical installations

Requirements for drains

Drains for common domestic wastewater

The umbrella term »drains« in drainage technology includes the following product groups:

- Floor drains
- Bath drains
- Cellar drains
- Roof drains – balcony and terrace drains

Drains facilitate cleaning of floor areas with water and drain the wastewater from showers or from roofs, balconies or terraces directly into the drainage system. Integrated odour traps with water seals or backflow flaps prevent that sewer gas gets into habitable rooms.
A drain has to be located next to each potable water draw-off point to allow water flowing out to be drained at any time without causing damage. Floor drains should be obligatory in rooms with house service connections.
From the hygienic point of view floor drains are also indispensable in public sanitary rooms such as WCs in swimming pools, hotels, schools, sports halls, etc.

Cellar drain in the domestic field

Fig. 3 – 1 Drain in the domestic field

Public field swimming pool

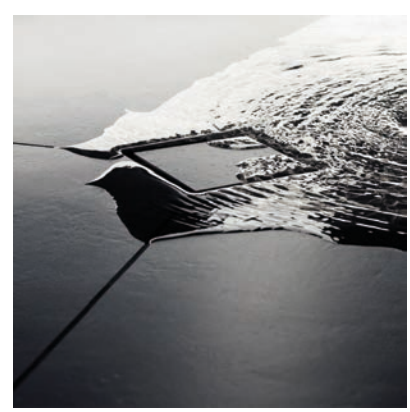

Fig. 3 – 2 Drain in the public field

DIN EN 1253 stipulates the physical requirements for drains for buildings. There are requirements for:

- odour traps their water seal levels,
- load-bearing capacity of the grates,
- drainage capacity,
- temperature resistance and
- leak tightness.

However, drains must not only comply with the requirements of the regulations, but also suit the functional requirements in many installation situations. Viega drains are therefore optimised for the typical installation situations in common practical usage and are ongoingly adjusted to the state of the art.

Equipment versions include:

- drains with horizontal and vertical outlet pipes for the waste water connection on, in, or under the floor,
- sizes and nominal widths for all required drainage capacities,
- flange designs for all installation and sealing variants,
- frame and grate variants of different materials and designs

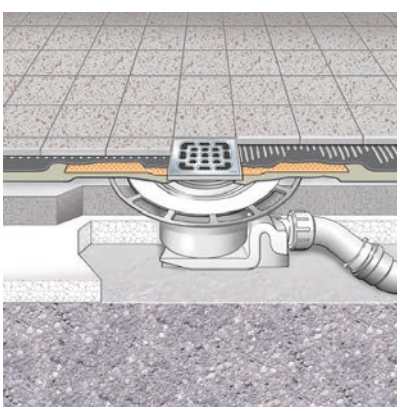

Fig. 3 – 3 Drain with thin bed sealing

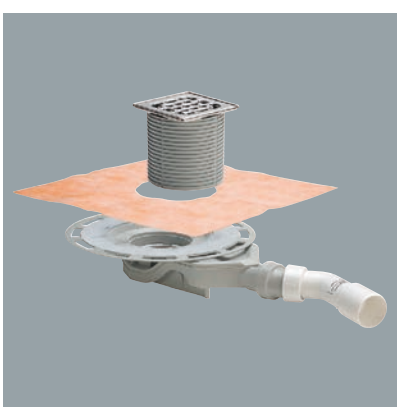

Fig. 3 – 4 Advantix bath drain

Advantix bath drain

Usage in bonded sealing

Odour traps – water seal levels

The odour trap filled with a water seal has proven for protection against entering sewer gas. It is characterised by its high reliability and low maintenance.

Depending on the type of construction, there are the following kinds of odour traps with a water seal:

- pipe,
- bottle or
- bell odour traps.

The precondition to prevent unpleasant odours in buildings is that the required minimum water seal level is maintained.

The »water seal level« is not – as it is often assumed – the entire height of the water column in the odour trap but the height of the water column actually preventing that sewer gas can escape (see Fig. 3 – 5).

Effective water seal level

Pipe odour trap

3

Floor drain

With 50 mm water seal level according to EN 1253

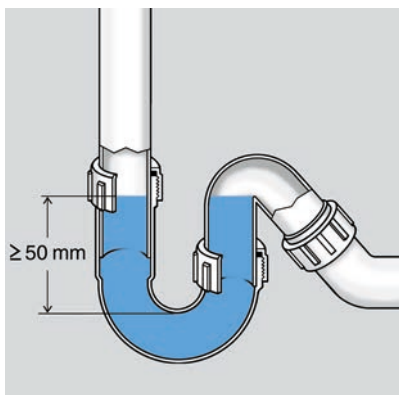

Fig. 3 – 5 Water seal level – siphon

Fig. 3 – 6 Water seal level – floor drain

All drains and drainage items in buildings should be provided with odour traps (water seal level min. 50 mm) or other special securing equipment. If unpleasant odours from rising sewer gas are ruled out in external areas, it is not necessary to use odour traps.
However, installing an odour barrier may be useful for balcony drains or downpipes ending in front of roof windows. In these cases it is recommended installing rainwater drains with odour traps and sieve inserts. In particular for refurbishments of old buildings the installation of bath drains with a low water seal level due to the small floor heights can often not be avoided. In such cases planners, installers and building owners have to take out suitable written agreements in considering the conditions on site.

Pipe interrupters

Function

DIN EN 1717 requires potable water systems to be designed such that the quality of the water in the system cannot be deteriorated. Therefore contaminations of all kinds should be avoided because potable water is already considered being contaminated (non-potable water) as soon as it has left the installation. To prevent that non-potable water is caused by backsiphonage (washing machines, high-pressure cleaners) or intake (pressure drop in riser pipes), it is necessary to install backflow protection devices at endangered draw-off points, as for example pipe interrupters between the mixing faucet and the inlet (see Fig. 3 – 7). If supply bathtubs or showers faucets are almost on the same height level as their drains or even lower, it is required to install pipe interrupters reliably ruling out intake of non-potable water.

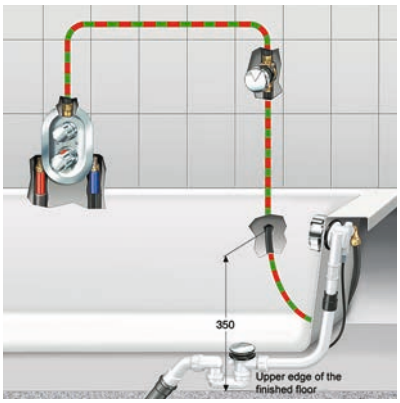

Fig. 3 – 7 Pipe interrupters installation diagram

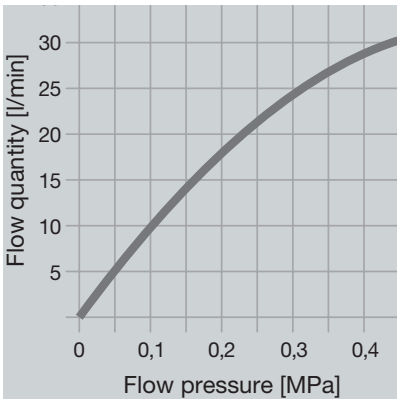

Fig. 3 – 8 Supply capacity

Concealed pipe interrupter

Model 6161.86

Supply capacity

Viega bathtub fittings with pipe interrupters

3

Load-bearing capacity

Drains, tops and grates must be made in such a way that they can stand the expected loads. The classification for indoor installation is described in EN 1253 (areas without traffic), and for outdoor installation in DIN EN 124.

Mechanical loading

Consider the traffic!

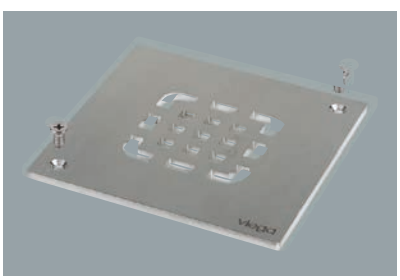

Fig. 3 – 9 Floor drain – stainless steel grate

Fig. 3 – 10 Shower channel – stainless steel grate

Load-bearing capacity stainless steel grate

Load-bearing capacity class L 15 = 1500 kg

Strong and safe to tread on in the domestic field

Load-bearing capacity classes – in accordance with DIN EN 1253

Class	Surface areas to be drained	Max. load [kg]
H 1.5	**Unused flat roofs** Example: Roofs with a cover of bitumen and gravel, gravel covered roofs	150
K 3	Areas without traffic example: Bathrooms (public and private), public washing and shower facilities, balconies, loggias, terraces, green roofs	300
L 15	**Areas with light traffic** Only forklift trucks in commercial indoor premises	1500
M 125	**Traffic** Example: Car parks, factories, workshops	12500

Table 3 – 1

Drainage capacity
Minimum drainage capacities (drain values) of floor drains are stipulated in DIN EN 1253-1. Due to the constructional situation these requirements can however not always be complied with – small floor heights often require special solutions. The especially slim drain models used in these cases have lower drainage capacities due to the smaller pipe cross-sections. It is vital here to know the exact capacity of the existing supply faucets to determine the suitable drain.

Standard shower heads have the supply capacity of max. 0.4 l/s. This capacity determines the rating of the drain even if the nominal capacity of the associated mixing faucet is higher. If no further inlets are concerned, a slim drain with a »non-standard conforming« drainage capacity can be used in this case.
Drainage capacities for drains with one of several inlets are specified in DIN EN 1253-1 paragraph 8.11.2.

Drainage capacities of Viega floor drains
To ensure accumulation heights of showers on floor level that are as low as possible, the following tables specify the drainage capacities at 10 mm in addition to the known accumulation height of 20 mm.

Advantix shower channels – drainage capacities

Viega product		Model	Nominal width	Construction height to flange upper edge min–max [mm]	Drainage capacity at accumulation height over the grate			Water seal level[2] [mm]
					According to DIN EN 1253[1]	10 mm	20 mm	
					[l/s]			
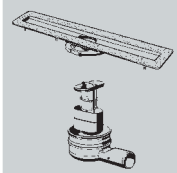	**Advantix shower channel**	4982.92	DN 40	95	0.60	0.50	0.55	50
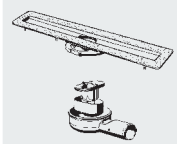	**Advantix shower channel** Refurbishment	4982.93	DN 40	70	0.60	0.40	0.45	25
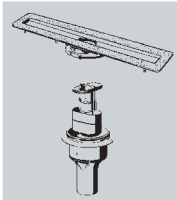	**Advantix shower channel** vertical	4982.94	DN 50	40	0.80	0.9	1.1	50
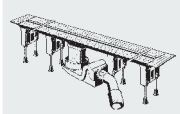	**Advantix Vario shower channel**	4965.10	DN 40/50	95–150	0.80	0.40	0.8	50
	Advantix Vario shower channel Refurbishment	4966.10	DN 40/50	70–95	0.80	0.55	0.60	25
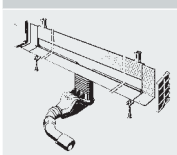	**Advantix Vario wall drain**	4967.10	DN 50	90–115	0.80	0.45	0.60–0.75	50
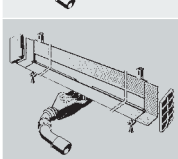	**Advantix Vario wall drain** Refurbishment	4968.10	DN 50	70–95	0.80	0.40	0.50	25

Table 3 – 2

[1] For accumulation height 20 mm: Use of floor drain without lateral connections because the minimum drain value must be 0.4 l/s for the wastewater drain of a single showerhead.

[2] 50 mm required according to DIN EN 1253

Advantix bath drains system 100 – drainage capacities **1 / 2**

Viega product		Model	Nominal width	Construction height to flange upper edge min–max [mm]	Drainage capacity at accumulation height over the grate			Water seal level[2] [mm]
					According to DIN EN 1253[1]	10 mm	20 mm	
					[l / s]			
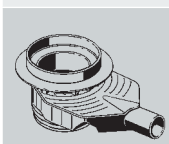	**Advantix Top bath or floor drain**	4927.3	DN 50	90–110	0.80	0.75–1.2[3]	0.80–1.20[3]	35–50
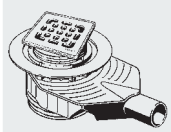	**Advantix Top bath drain**	4914.10	DN 50	90–110	0.80	0.75–0.95	0.80–1.00	35–50
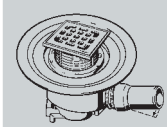	**Advantix bath drain**	4921.76	DN 50	115	0.80	0.60	0.90	50
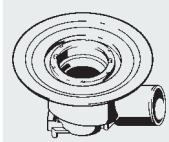	**Advantix bath drain**	4921.75	DN 70	115	0.80	0.70	1.10	50
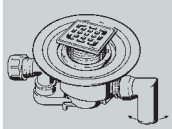	**Advantix bath drain**	4911.6	DN 50	115	0.80	0.66	1.1	50
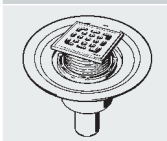	**Advantix bath drain**	4926	DN 50	140	0.80	0.70	0.90	50
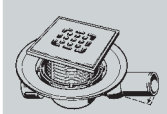	**Advantix bath drain**	4935	DN 50	75	0.80	0.40	0.60	30

Table 3 – 3

[1] For accumulation height 20 mm: Use of floor drain without lateral connections because the minimum drain value must be 0.4 l/s for the wastewater drain of a single showerhead.

[2] 50 mm required according to DIN EN 1253

[3] Depending on the size and the height of the top

2/2

Viega product		Model	Nominal width	Construction height to flange upper edge min–max [mm]	Drainage capacity at accumulation height over the grate [l/s]			Water seal level[2] [mm]
					According to DIN EN 1253[1]	10 mm	20 mm	
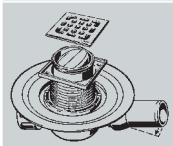	**Bath drain**	4936.2	DN 50	75	0.80	0.33	0.40	50
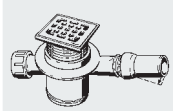	**Advantix bath drain**	4921.4	DN 50	115	0.80	0.55	0.90	50
	Advantix bath drain	4914.20	DN 50	85–120	0.80	0.75–0.95	0.80–1.00	35–50
	Advantix bath drain	4927	DN 40/50	85–155	0.80	0.40	0.55	50
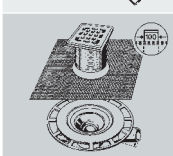	**Advantix bath drain** Slimline	4939	DN 50	70	0.80	0.45	0.55	30
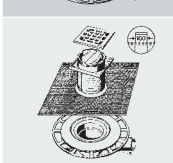	**Bath drain**	4936.4	DN 50	70	0.80	0.33	0.40	50
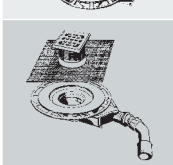	**Advantix bath drain** 62 mm	4980.60	DN 40/50	62	0.80	0.50	0.55	25

Advantix floor drains system 145 – drainage capacities

Viega product		Model	Nominal width	Construction height to flange upper edge min–max [mm]	Drainage capacity at accumulation height over the grate			Water seal level[2] [mm]
					According to DIN EN 1253[1]	10 mm	20 mm	
					[l/s]			
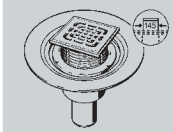	Advantix bath drain	4951.1	DN 50	160	0.80	0.65	1.50	50
			DN 70	175	0.80	0.70	1.60	50
			DN 70/100	190	1.40	0.90	1.40	50
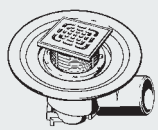	Advantix floor drain	4955.1	DN 70	120	0.80	0.60	1.10	50
			DN 100	130	1.40	1.20	1.70	50
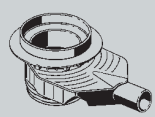	Advantix Top bath or floor drain	4927.3	DN 50	90–110	0.80	0.75–1.20[3]	0.80–1.20[3]	35–50
	Advantix floor drain	4914.21	DN 50	85–120	0.80	0.85–1.15	0.90–1.20	35–50

Table 3 – 4

[1] For accumulation height 20 mm: Use of floor drain without lateral connections because the minimum drain value must be 0.4 l/s for the wastewater drain of a single showerhead.

[2] 50 mm required according to DIN EN 1253

[3] Depending on the size and the height of the top

Temperature resistance – material properties
»Polypropylene« – a plastic with special properties has proven as the material for drains
Excellent temperature resistance – the materials used can stand temporary contact with domestic wastewater up to the temperature of 95 °C.
Very good resistance against greases and chemicals.
Smooth walls prevent deposition – self-cleaning effect.
Very good workability.

Fig. 3 – 11 Polypropylene granulate

Fig. 3 – 12 Use of Optifix

Polypropylene
High-grade material for drains

Maintenance
Cleaning Optifix 3

The drains mentioned that this chapter are only suitable for common domestic wastewaters with a pH-value over 4 and the temporary maximum temperature of 95 °C.
It is not permitted introducing other liquids such as cleaning agents that could damage sanitary installations and pipe materials.

Maintenance and inspection
The user of the drainage system is responsible that only non-polluted wastewater that cannot damage the public drainage systems is introduced.
Regular maintenance and repair work has to be scheduled to ensure permanent readiness for operation of all components. Drainage systems should be inspected every six months and checked for leak tightness. This also includes maintenance of the floor drains and checking the water levels in the odour traps.

Sound protection

Floor drains are in most cases acoustically uncritical and can therefore be classified in the same way as wastewater pipes – no particular acoustic examinations are required. This is on the one hand due to the small water quantities and falling heights in the drain unit, and on the other hand to the flow-steadying action of the odour trap.

When comparing floor drains and outlet pipes acoustically that were both equipped with a packed bed of mineral fibre of approx. 2 to 3 mm thickness, no differences in the measurements were found.
If floor drains are installed properly – i.e. without structure-borne noise bridges – they will not emit disturbing sounds. Additional cement stabilisation does not bring further advantage. Viega shower channels and corner drains come with accessories such as sound protection tape and sound insulated adjustable feet to ensure that the installation has no contact with the installation body. The use of these accessories will reliably ensure that the requirements in DIN 4109 and VDI 4100 – according to the maximum installation sound level 19 dB(A) – are complied with.

Viega corner drain
Wall mounting with sound protection tape

Viega bath drain
Acoustically insulated mounting with packed bed of mineral fibre

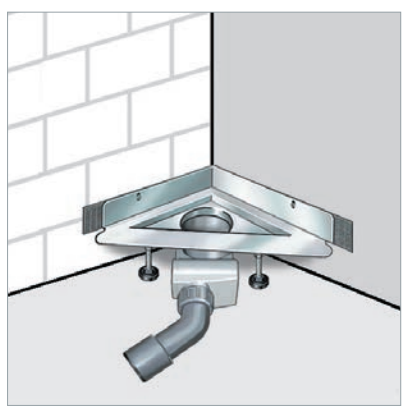

Fig. 3 – 13 Sound protection – corner drain

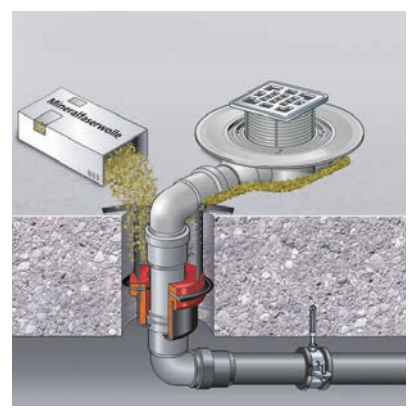

Fig. 3 – 14 Floor breakthrough

Fig. 3 – 15 Advantix shower channel

Advantix floor drains – sound values

Fraunhofer IBP		Sound caused by flow sounds						Sound caused by footstep sounds*			
			DIN 4109		VDI 4100 Sound protection			DIN 4109			
		Basement rear	Minimum requirement	Higher requirement	Level 1	Level 2	Level 3	Standard footstep sound reinforced concrete floor 150–220 mm 76–69 dB	Requirements for floors Standard footstep sound minimum requirements	Measured footstep sound reduction of the raw concrete floor due to the entire floor construction incl. shower channel	Expected footstep sound level for raw concrete floor thickness 150 mm
Product	**Test report**	dB(A)						mm/dB	dB		
Advantix Vario shower channel	P-BA 164/2011	15	30	25	30	27	24	150/76	MSB: 53 SFD: 48	32	44
Advantix Vario wall drain in front of solid wall	P-BA	21 According to DIN 4109 17 According to DIN 4100								29	47
Advantix Vario wall drain in front of drywall	P-BA	12 According to DIN 4109 12 According to DIN 4100								30	46
Advantix Basic shower channel	P-BA 42/2009	19								32	44
Advantix corner drains	P-BA 77/2007	18								32	44
Advantix Top	P-BA 195/2010	19								38	38
Advantix shower channel	P-BA	ok								–	ok

Table 3 – 5

MSB multi-storey buildings; SFD single-family dwellings

Calculation example

Higher requirement for a reinforced concrete floor 150 mm without superstructures minus sound reduction by the structure including Viega shower channel results in the footstep sound level: 76 dB–32 dB = **44 dB**

Waterproofing

Drains on floor level are required for planning and execution of barrier-free sanitary systems, that can be properly integrated in floor constructions – standard solutions are no option in these cases.

The requirements on the technical equipment of the drains and their drainage capacity are high. In addition, individual design options are desired by architects and users. A wide product range leaving sufficient space for technology and design has been developed to deal with this area of conflict.

Knowledge of the products and their processing is required to utilise all the advantages of these new drainage systems.

- For planning – knowledge of the required drainage capacities and the requirements for sound and fire protection.
- For mounting – knowledge of the proper selection and professional assembly of the drain components including professionals sealing towards the floor construction.

Tiles have been used for decades as the wall covering in moist rooms. High-grade permanently elastic materials are used at the connection points of components and at lead-throughs for faucet connections – but these points are still among the weak areas of waterproofing. Selecting the appropriate sealing system prevents soaking of walls, screeds and heat insulation. Floor drains, as all the other components going through sealing layers, must be made to be permanently tight. Sealing with liquid foil on the screed immediately below the tile bonded in the thin bed the has become the standard. Bonded sealing replaced the use of bitumen sheeting or plastic sealing lanes.

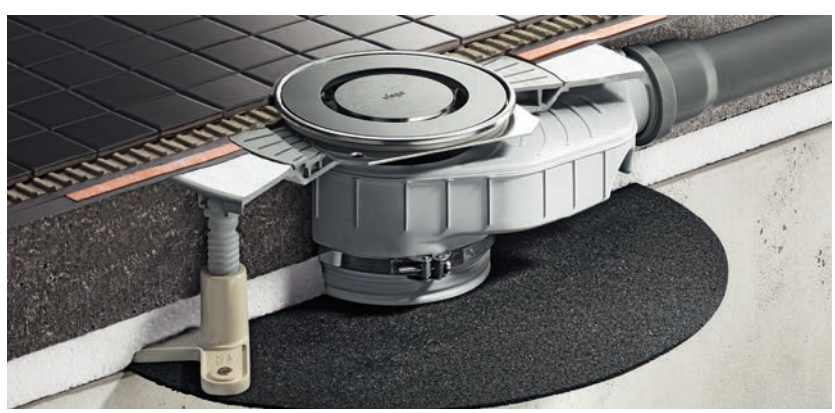

Fig. 3 – 16

Floor drains

In sealing technology today, three different sealing variants are used:

- sealing or flange connection with sealing lanes
- adhesive flange
- flange for bonded sealing

Fig. 3 – 17 Floor drain in raw concrete

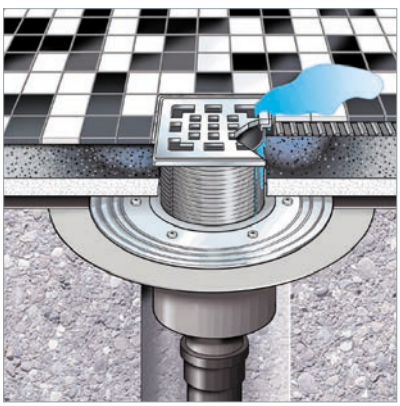

Fig. 3 – 18 Bath drain

Bitumen sealing

On the raw concrete

Screed moisture penetration

Damage caused by torn off silicone seal

Conventional sealing

Components can be permanently protected from moisture even with »conventional« sealing technology. Sealing is made by sealing lanes of bitumen or EPDM that are laid directly on the raw concrete or the heat insulation. This method has proved itself especially for sealing of balconies, terraces, floor panels and cellar floors. In addition, sealing lanes are often used as an additional second sealing layer below the bonded seal.

Processing variants

Viega drains can be integrated in bitumen, EPDM or other plastic sealing lanes. The clamping ring with the sealing collar protects the drain unit from damage during welding or bonding work and ensures safe crossover between the drain and the sealing lane.
It cannot be recommended using such constructions for showers on floor level because moisture may get into the screed and the insulation layer.

Mounting of sealing collar

The sealing collar has a different coating at the sides and can therefore be used for EPDM and bitumen sealing systems. The sealing collar is placed on the drain with the suitable contact side pointing upwards and secured with the flange ring.

Arranging the sealing collar

Fig. 3 – 19 Arranging the sealing collar

EPDM coat up

For sealing with bitumen sealing lanes.

Sealing with bitumen lanes

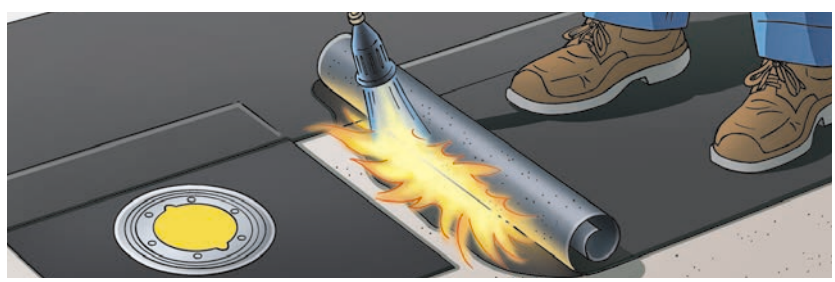

Fig. 3 – 20 Heat-sealing of bitumen sealing lane with gas burner

Bitumen coat up

For sealing with EPDM sealing lanes.

Sealing with EPDM sealing lanes

Fig. 3 – 21 Heat sealing of the EPDM sealing collar with hot air

Bonded sealing

Planning

The quality of the Viega products for bonded sealing is ensured by general building inspectorate test certificates and annual quality inspections by LGA Würzburg. But also the responsible planner has the obligation to consider the individual boundary conditions for planning and execution. This includes selecting appropriate drains and associated accessories, realistic assessment of the wear class and coordination/supervision of the work sequences of the building services in the interplay between the installer, screed installer and tiler.

Floor drains require above all permanently tight solutions – the professional and coordinated mounting sequence is indispensable here. The site management defines the order of work and supervises the building services especially for the following assembly steps:

- Making the floor breakthrough and/or the drill hole for insertion of the drain.
- Arrangement and connection of the drain unit
- Completion of the screed work
- Sealing of the stacking element/flange
- Making the finished floor
- Fitting the drain grate
- Permanently elastic jointing of all connection points

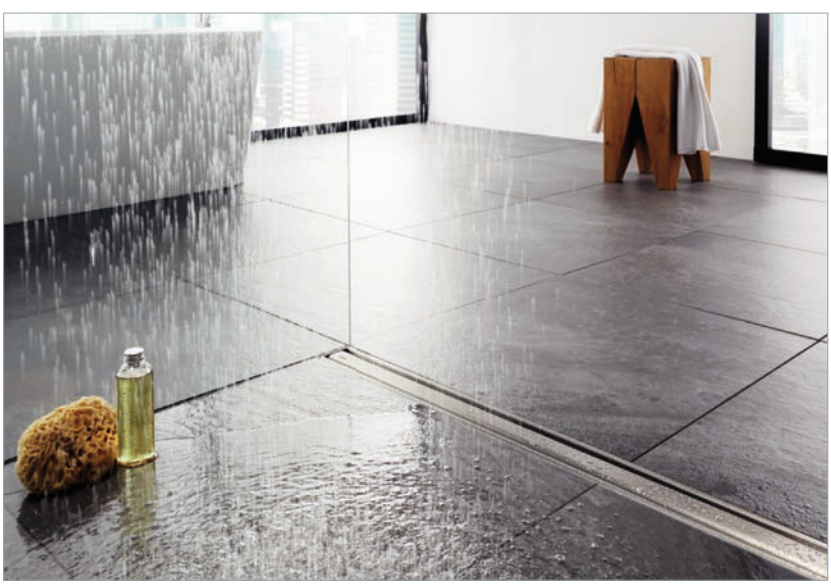

Fig. 3 – 22 Advantix shower channel

Advantix Vario shower channel

bonded sealing with the tile surface

System description

The components affected by moisture have to be protected from moisture penetration to prevent structural damage. Arising water has to be drained professionally in compliance with the general rules of engineering.
For this field of application liquid sealing (applied with brushes, rollers or spatulas) is used for bonded sealing with tiles and panels. The wear class, the underground and the bonded sealing (plastic-cement-mortar combination or reaction resins) have to be determined and selected according to ZDB instruction sheet 08/2012.

Sealing above screed

Integration with special stacking element for bonded sealing

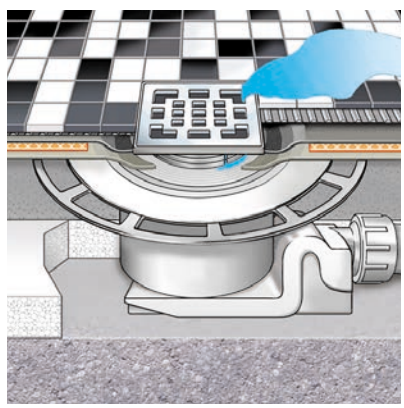

Fig. 3 – 23 Bonded sealing

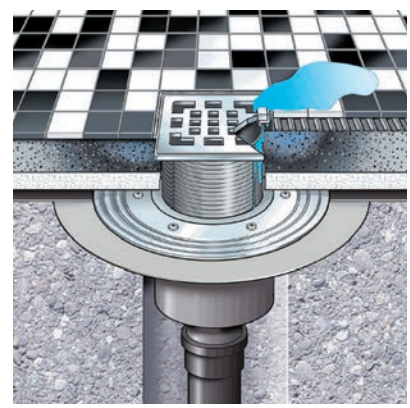

Fig. 3 – 24 Moisture penetration

Components

The following components also belong to the professionally completed installation of a floor drain with bonded sealing in a floor construction:

- Drain with a flange of the width of min. 30 mm for bonded sealing.
- Sealing collar or sealing tape, suitable for the different materials between the drain flange and the load distribution layer (screed).
- Approved bonded sealing that has to be applied liquid with sufficient mechanical, chemical and thermal load-bearing capacity.

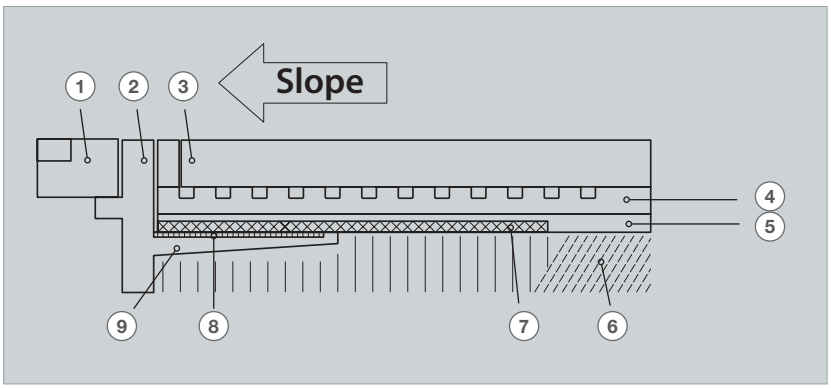

Fig. 3 – 25 Bonded sealing – structure

1 Grate
2 Top piece adhesive flange
3 Tile
4 Thin-bed mortar
5 Bonded sealing
6 Screed
7 Sealing collar
8 Mat
9 Adhesive flange

Reliable bonded sealing – overview

Bonded sealing
With proofs of practicability

Only approved bonded sealing with proofs of practicability in keeping with building law may be used with suitable drains, e. g.:

- for the wear classes A and AO:
  In accordance with ETAG 022 T1.
- for the wear classes A, B and C:
  In accordance with DiBt Rule list A, Part 2 of the DiBt and the test principles for bonded sealing (PG AIV-F)
- according to DIN EN 14 891:
  »Liquid-applied impermeable products for use below ceramic tiling boded with adhesives«.

Viega drains

Viega developed special »Drains and stacking elements« of polymer concrete and plastic fulfilling all the requirements in ZDB data sheet 1/2010 for being used with bonded sealing. They allow stable integration in the floor construction and with their flange connections create ideal preconditions for using bonded sealing. The flanges are available in the following designs according to the individual installation situations/requirements:

- Plastic – with or without integrated PP mat Fig. 3 – 26
- Stainless steel

Stacking element

Made of plastic with sealing collar

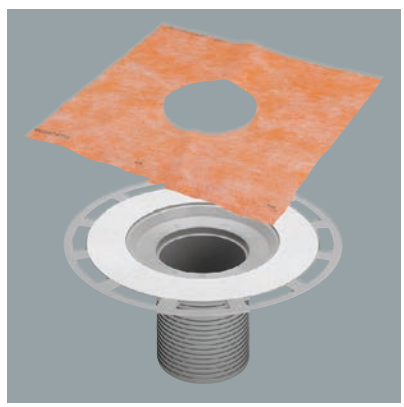

Fig. 3 – 26 Stacking element

Fig. 3 – 27 shows a slimline Viega floor drain with flange, sealing collar and mat to be integrated in the liquid foil. Sealing elements of Ardex, PCI and Sopro were used for the LGA tests.

Advantix floor drain

Slimline

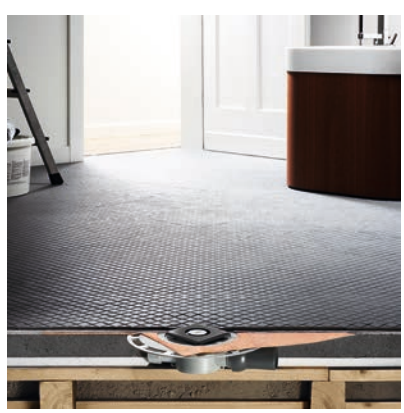

Fig. 3 – 27 Advantix floor drain

Advantix Vario shower channels and wall drains are delivered with mounting adhesive and sealing tape.

The sanded flange of Advantix shower channels of stainless steel provides an optimal adhesive surface for the bonded sealing. Additional mounting adhesive and sealing tape can be ordered as an option for special installation situations.

Fig. 3 – 28 Advantix shower channel

Fig. 3 – 29 Shower channel – accessories

Advantix shower channel

Frameless with sanded sealing flange

The Advantix Vario wall drain has an installation depth of 25 mm only and can be mounted in solid, lightweight or pre-wall constructions.

Fig. 3 – 30 Advantix Vario – wall drain

Fig. 3 – 31 Wall drain – sealing flange

Advantix Vario wall

Shower channel and wall drain made-to-measure

Advantix Vario superfast, can be shortened individually, with standing grate and sealing accessories. Mounting at the wall or in the room.

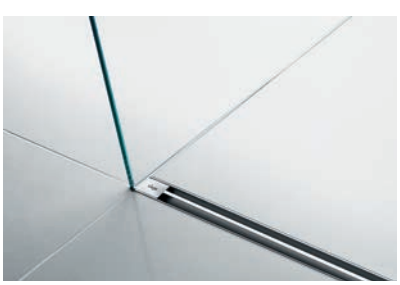

Fig. 3 – 32 Advantix Vario

Fig. 3 – 33 Base unit can be shortened

Advantix Vario

Shower channel made-to-measure

Product group

V1

Drains and overflows for bathtubs

Fittings with inlet – overview

Drains and overflows for bathtubs – fittings with inlet – technical data

	Product name model	Equipment sets		Inlet[1] [l/min]	Drain[2] [l/s]	Overflow[3] [l/s]	Bowden cable lengths [mm]
	Multiplex Trio Functional unit	**MT5**	**MT3**	15	0.92	0.63	560 725 1070
	Multiplex Trio	**MT9**					
	Multiplex Trio Valve cone drive	**Rosette**					–
	Multiplex Trio F Rotatable rosette	**M5**			0.85		560 725 1070
	Multiplex Trio F Valve cone drive	**Rosette**					Centre connection

Table 3 – 6

[1] At 0.15 MPa (1.5 bar) with pipe interrupter [2] accumulation height 300 mm [3] accumulation height 60 mm over overflow hole centre

The products on this page can be combined with the electronic mixing unit Multiplex Trio E.
Drainpipes Ø DN 40 / 50
Drain opening Ø 52 mm

Min. installation dimensions [mm]		Features
Top	Bottom	
33	120	■ Water inlet through overflow unit ■ Without rotatable rosette, inlet cover and valve cone ■ With inlet element, odour trap and drain elbow 45° ■ Chrome-plated valve
		■ Water inlet through overflow unit ■ With rotatable rosette, inlet cover, valve cone, inlet element, odour trap and drain elbow 45° ■ Elevation of water level by 50 mm ■ Chrome-plated valve
		■ Water inlet through overflow unit, ■ With electric valve cone drive, rosette, inlet cover, inlet element, odour trap and drain elbow 45° ■ Chrome-plated valve
	110	■ Water inlet through drain unit ■ With rotatable rosette, inlet cover, cover plate, inlet element, odour trap and drain elbow 45°
34		■ Water inlet through drain unit ■ With electric valve cone drive, rosette, inlet cover, cover plate, inlet element, odour trap and drain elbow 45°

Fittings with inlet – overview

2/2

3

Drains and overflows for bathtubs – fittings with inlet – technical data

	Product name Model	Equipment sets		Inlet[1] [l/min]	Drain[2] [l/s]	Overflow[3] [l/s]	Bowden cable lengths [mm]
	Rotaplex Trio Functional unit	 **RT 5**	 **RT 3**	15	1.25	0.63	725 1070
	Rotaplex Trio Valve cone drive	**Rosette**					Centre connection
	Rotaplex Trio F Rotatable rosette	 **R5**			1.00		725
	Rotaplex Trio F Valve cone drive	**Rosette**					Centre connection

Table 3 – 7

[1] At 0.15 MPa with pipe interrupter
[2] accumulation height 300 mm
[3] accumulation height 60 mm over overflow hole centre

The products on this page can be combined with the electronic mixing unit Multiplex Trio E.

Drainpipes Ø DN 40 / 50
Drain opening Ø 590 mm

Min. installation dimensions [mm]		Features
Top	Bottom	
33	90	■ Water inlet through overflow unit, ■ Without rotatable rosette, inlet cover and cover plate, ■ With inlet element, odour trap and drain elbow 45°
		■ Water inlet through overflow unit, ■ With electric valve cone drive, rosette, inlet cover, cover plate, inlet element, odour trap and drain elbow 45°
	110	■ Water inlet through drain unit, ■ With rotatable rosette, inlet cover, cover plate, inlet element, odour trap and drain elbow 45°
		■ Water inlet through drain unit, ■ With electric valve cone drive, rosette, inlet cover and cover plate, inlet element, odour trap and drain elbow 45°

Multiplex Trio Visign MT3/MT5

Flat version – 33 mm installation depth behind the bathtub

Drain Ø 52 mm

Equipment set

Visign MT5
Visign MT3

Rotatable rosette variants

Fig. 3 – 34 Multiplex Trio Visign MT3/MT5

Features

- Small installation depths
  - behind the tub edge 33 mm
  - below the tub 110 mm
- Chrome-plated valve top of brass
- Simple fixing with mounting aid,
  the water inlet adjusts to the shape of the tub

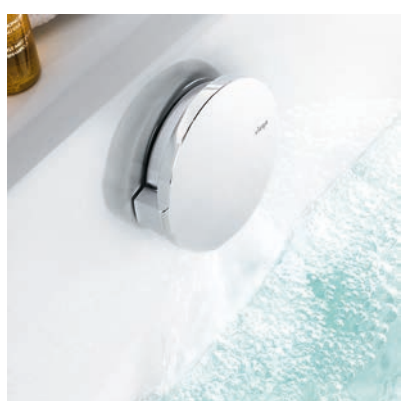

Fig. 3 – 35 Water inlet stream pattern

Multiplex Trio Visign components

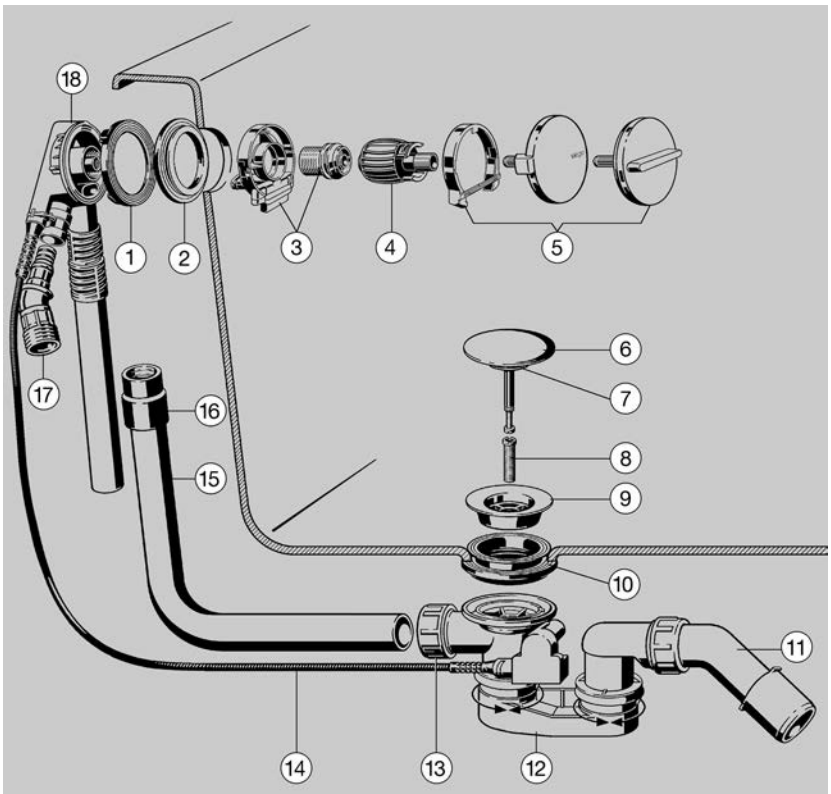

Fig. 3 – 36 Components – Multiplex Trio Visign MT3/MT5

1. Seal at overflow/inlet
2. Overflow seal
3. Supply flange with aerator and fixing screw
4. Mounting aid
5. Equipment set
6. Valve cone
7. Valve cone seal
8. Hollow bolt M12
9. Valve top
10. Seal at drain
11. Outlet elbow 45°
12. Odour trap
13. Union nut at drain
14. Bowden cable
15. Overflow pipe
16. Sleeve for overflow pipe
17. Connecting piece
18. Overflow unit – flat 33 mm

Drain Ø 52 mm

Rotatable rosette variants Visign MT9

Multiplex Trio Visign MT9

Elevation of water level by 50 mm

.

Fig. 3 – 37 Multiplex Trio Visign MT9

Features

- Elevation of water level by 50 mm
- Small installation depth behind the tub edge 33 mm
- Easy mounting due to pre-assembled parts
- Chrome-plated valve top of brass
- Flat stream pattern

Multiplex Trio Visign MT9 components

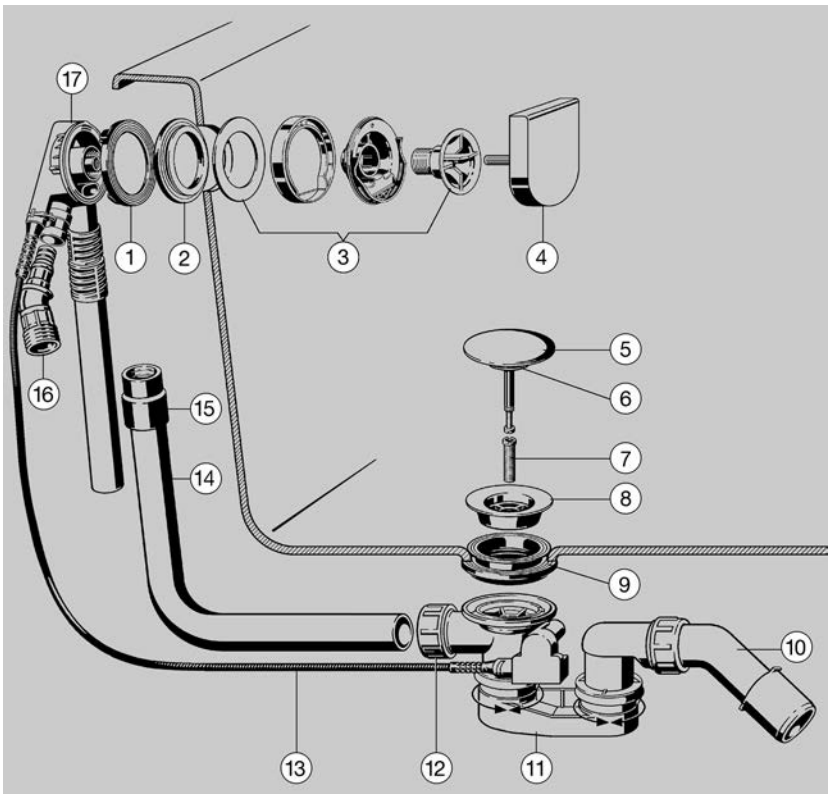

Fig. 3 – 38 Components – Multiplex Trio Visign MT9

1. Seal at overflow/inlet
2. Overflow seal
3. Supply flange
4. Rotatable rosette
5. Valve cone
6. Valve cone seal
7. Hollow bolt M12
8. Valve top
9. Seal at drain
10. Outlet elbow 45°
11. Odour trap
12. Union nut at drain
13. Bowden cable
14. Overflow pipe
15. Sleeve for overflow pipe
16. Connecting piece
17. Overflow unit – flat 33 mm

Multiplex Trio F

Drain Ø 52 mm
Equipment set
Visign M5

Fig. 3 – 39 Multiplex Trio F

Fig. 3 – 40 Inlet/drain valve

Features

- Interruption of inlet and wastewater by DVGW-tested pipe interrupter in accordance with DIN EN 1717, protection equipment DB, e.g. Viega art. no. 274 528.
- Small construction height below the tub 110 mm
- Drainpipe with ball joint
- Can be combined with rotatable rosette M3

Multiplex Trio F – components

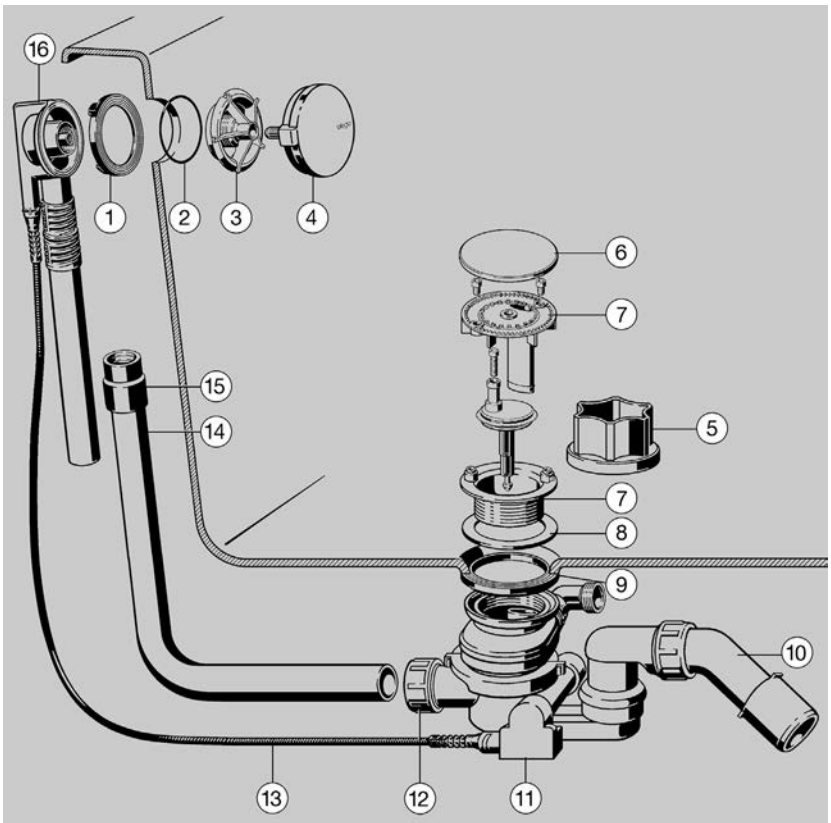

Fig. 3 – 41 Components – Multiplex Trio F

1. Seal at overflow/inlet
2. O-ring
3. Fixing flange
4. Rotatable rosette
5. Fixing aids
6. Cover plate
7. Screw-on valve with inlet element
8. Seal
9. Profile seal
10. Drain elbow 45°
11. Odour trap
12. Union nut at drain
13. Bowden cable
14. Overflow pipe
15. Sleeve for overflow pipe
16. Overflow unit

Multiplex Trio F / Rotaplex Trio F Visign – valve cone drive

Tub filling by valve in floor drain

Drain Ø 90 mm

Multiplex Trio F
Rotaplex Trio F

Fig. 3 – 42 Multiplex Trio F

Fig. 3 – 43 Rotaplex Trio F

Features

- Electric valve cone drive
  - DC-12 V / 0.5 A
  - On-off pulse count, pulse duration max. 3 sec.
  - 3 m connection line JST/XHP 5
- Interruption of inlet and wastewater by DVGW-tested pipe interrupter in accordance with DIN EN 1717, protection equipment DB, e.g. Viega art. no. 274 528.
- Small construction height below the tub 100 mm
- Flexible odour trap

Multiplex Trio / Rotaplex Trio Visign MT5 – valve cone drive

Flat version – only 33 mm installation depth behind the bathtub

Fig. 3 – 44 Multiplex Trio MT5

Fig. 3 – 45 Rotaplex Trio MT5

Drain Ø 90 mm

Multiplex Trio
Rotaplex Trio

Features

- Electric valve cone drive
  - DC-12 V / 0.5 A
  - On-off pulse count, pulse duration max. 3 sec.
  - 3 m connection line JST/XHP 5
- For bathtubs with centre connection
- Small installation depth behind the tub edge 33 mm
- Low mounting expenditure due to pre-assembled parts
- Chrome-plated valve top of brass
- Fixing with mounting aid
- Flat stream pattern

Rotaplex Trio Visign RT5 / RT3

Flat version – 33 mm installation depth behind the bathtub

Drain Ø 90 mm

Equipment set
Visign RT5
Visign RT3

Rotatable rosette variants

Fig. 3 – 46 Rotaplex Trio Visign RT1 / RT2

Water inlet

Through the drain and overflow

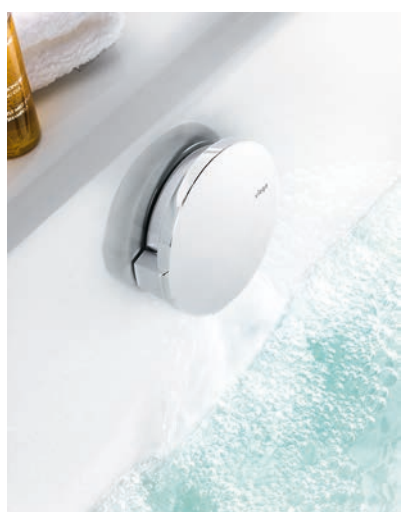

Fig. 3 – 47

Features

- Small installation depths
  - behind the tub edge 33 mm
  - below the tub 90 mm
- Odour trap accessible from above
- Low mounting expenditure due to pre-assembly of all parts
- Drain and cover plate fixing with three screws only
- Drain with stainless steel flange
- Simple fixing with mounting aid and Allen screws, the pivotable water inlet adjusts to the shape of the tub

Rotaplex Trio Visign RT3 / RT5 components

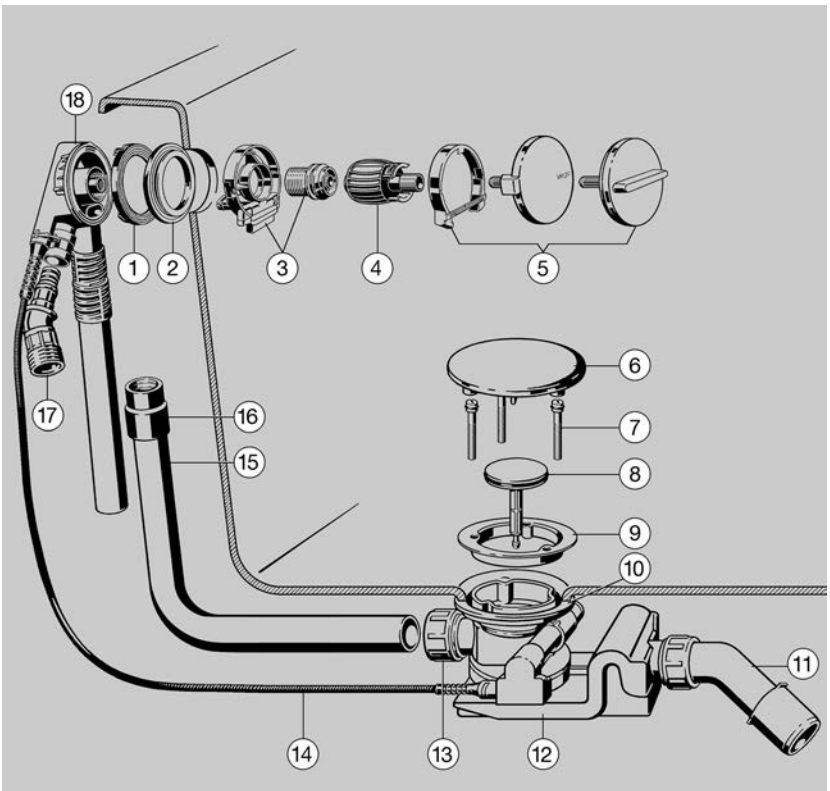

Fig. 3 – 48 Components – Rotaplex Trio Visign RT3 / RT5

1 Seal at overflow/inlet
2 Overflow seal
3 Supply flange with aerator and fixing screw
4 Mounting aid
5 Equipment set
6 Cover plate
7 Fixing screws
8 Valve cone
9 Fixing flange
10 Seal at drain
11 Outlet elbow 45°
12 Odour trap
13 Union nut at drain
14 Bowden cable
15 Overflow pipe
16 Sleeve for overflow pipe
17 Connecting piece
18 Overflow unit flat 33 mm

Rotaplex Trio F
Tub filling from floor drain

Drain Ø 90 mm

Rotaplex Trio F
Bathtub fitting
– drain
– inlet
– overflow

Fig. 3 – 49 Rotaplex Trio F

Water inlet
Through drain valve

Fig. 3 – 50 Water inlet from the floor

Features
- Strict interruption of inlet and wastewater – protected by DVGW-tested pipe interrupter DN 20 (construction type A2) DIN EN 1717, protection equipment DB, e.g. Viega art. no. 274 528.
- Small installation dimensions – construction height below the tub 100 mm
- Drainpipe with ball joint
- Can be combined with rotatable rosette M3

Rotaplex Trio F – components

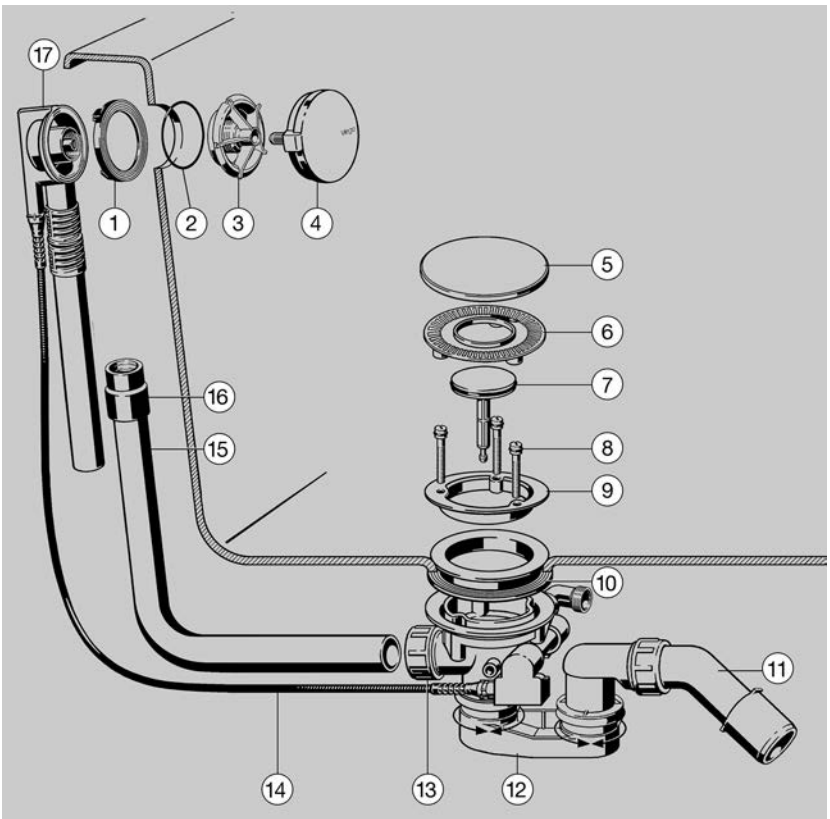

Fig. 3 – 51 Components – Rotaplex Trio F

1. Seal at overflow
2. O-ring
3. Fixing flange
4. Rotatable rosette
5. Cover plate
6. Inlet element
7. Valve cone
8. Fixing screw
9. Fixing flange at drain
10. Profile seal/double seal
11. Drain elbow 45°
12. Odour trap
13. Union nut at drain
14. Bowden cable
15. Overflow pipe
16. Sleeve for overflow pipe
17. Overflow unit

Multiplex Trio E3, E2, E – electronic mixing unit

System description

The Multiplex Trio fittings E, E2 and E3 model variants for electronically controlled tub filling differ by the design of the control elements – the functional scope is the same.
LED displays assist in selection and control of the water temperature, inlet intensity and fill level. The individual settings determined can be stored as personal settings. When one of these programs is called, the tub fills automatically with a controlled water temperature and automatic switching off when the fill level is reached.

Intended use

Multiplex Trio E is a mixing fitting for bathtubs with electronically controlled filling quantity and water temperature control. The fitting satisfies DIN EN 1111 / DIN EN 15 091 and is suitable exclusively for potable water systems according to DIN 1988 or DIN EN 806.

The 230 V power supply must satisfy VDE 0100 part 701 »Low-voltage electrical installations«. In addition, the country-specific regulations and standards as well as the instructions for use accompanying the products have to be observed.

The safety shutdown for the inlet does not replace the overflow function stipulated in DIN EN 274. A pipe interrupter has to be installed between the mixing unit and bathtub drain.

There is the risk of scalding when exceeding the temperature safeguard at 40 °C.

Fig. 3 – 52 Multiplex Trio E3 – control elements

Components

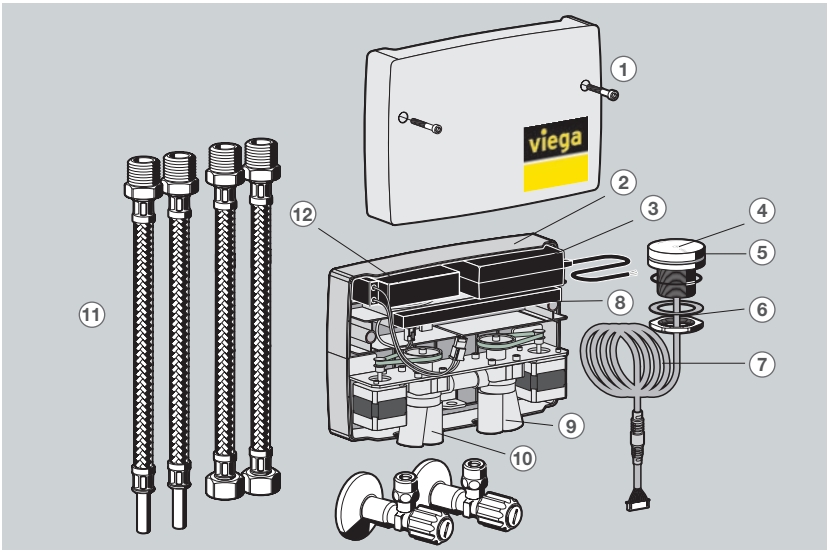

Fig. 3 – 53 Components – Multiplex Trio E

1. Casing cover
2. Casing
3. Power pack 230 V with 3 m connection cable
4. Rotating knob functions: Pressing, turning, LED colour display
5. Electric element with illuminated LED light ring
6. Fixing element with union nut and O-ring
7. Connection cable
8. Control electronics – non-interchangeable plug contacts for all components
9. Height-adjustment unit tub/shower
10. Height-adjustment unit mixing fitting HW/CW
11. Connection hoses, flexible ½ G x 12 mm
12. Battery for emergency operation

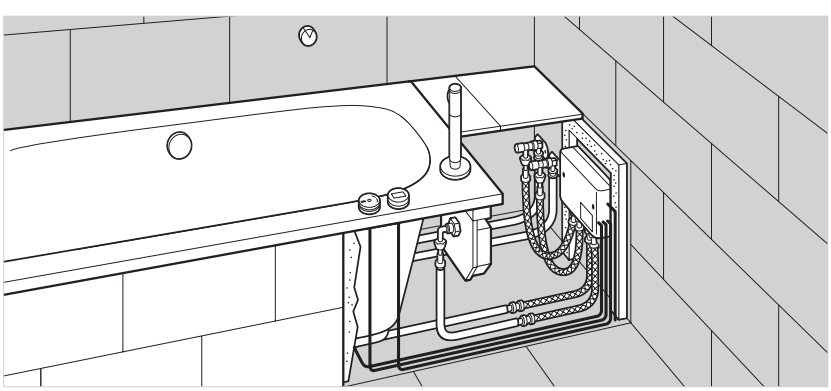

Fig. 3 – 54 Multiplex Trio E– mounting example

Space requirement for installation approx. L 255 x W 175 x H 75

Model overview

The functional range of all three models is the same. The option for actuation of an electrically actuated drain valve is available.

- Water inlet Start / Stop
- Water temperature
- Use of hand shower/tub filling
- Water inlet intensity
- Temperatures > 40 °C/cancellation of temperature safeguard
- Data storage

Special functions

Diagnosis and cleaning mode, thermal disinfection

Multiplex Trio E 3

Functions split up to two control elements

In addition with digital display

Fig. 3 – 55 Two-button operation button 1

Fig. 3 – 56 Two-button operation – button digital

Multiplex Trio E 2

Functions split up to two control elements

Fig. 3 – 57 Two-button operation button 1

Fig. 3 – 58 Two-button operation button 2

Multiplex Trio E 1

All the functions in one control element

Fig. 3 – 59 Single-button operation

Technical data

Flowthrough volume in conjunction with Viega pipe interrupter

Electronics

Power supply	100-240 V AC / 50-60 Hz
Standby operation	< 1 W
P_{max}	< 45 W
Rechargeable battery	12 V DC / 0.8 Ah
Control element	3.3 V

Mixing unit connections

Inlet	2 x Rp 1/2
Outlet	2 x Rp 1/2

Operating conditions

Hot water temperature	$T_{max} \leq 60$ °C
Cold water temperature	$T_{max} \geq 12$ °C
Pressure difference HWT / CWT	$\Delta p_{max} \leq 1$ bar
Operating pressure p_{max}	1.0 MPa
Recommended flow pressure	0.1–0.5 MPa
Test pressure p_{max}	1.5 MPa–1.5-fold operating pressure

Features

- Electronically controlled mixing fitting
- Chrome-plated control elements
- Easy to operate
- Suitable for Multiplex Trio or Rotaplex Trio
- Easy to install thanks to compact design approx. L 255 x W 175 x H 75
- Individual bathing programs selectable at the push of a button
- Safe and active overflow protection
- Data backup in the event of a power failure by integrated rechargeable battery

Viega Multiplex Trio E-WLAN module

The functions of the electronic bathtub fittings Viega Multiplex Trio E, E2 and E3 can also be controlled by mobile terminal equipment (Android, iOS, Windows) in direct operation or via the internet.
Operation is via the browser (Safari, Internet Explorer, Chrome, Firefox) of the mobile terminal equipment.

Fittings without inlet – overview

Drains and overflows for bathtubs – fittings without inlet – technical data

	Product name	Equipment sets		Drain[1] [l/s]	Overflow[2] [l/s]	Bowden cable lengths [mm]
	Multiplex Functional unit	**M5**	**M3**	0.92	0.63	560 725 1070
	Multiplex	**Rosette**				
	Multiplex	**M9**				
	Rotaplex Functional unit	**R5**	**R3**	1.25		
	Citaplex			0.92		Standard bathtubs

Table 3 – 8

[1] Accumulation height 300 mm

[2] Accumulation height 60 mm

Multiplex drain openings Ø 52 mm
Rotaplex drain openings Ø 90 mm

Min. installation dimensions [mm]		Features
Top	Bottom	
33	110	■ without rotatable rosette and valve cone, ■ with odour trap and drain elbow 45°, ■ chrome-plated valve
		■ with rotatable rosette and valve cone, ■ with odour trap and drain elbow 45°, ■ chrome-plated valve
		■ with elevation of water level by 5 cm ■ with rotatable rosette and valve cone ■ with odour trap and drain elbow 45° ■ chrome-plated valve
		■ without rotatable rosette, inlet cover and cover plate, ■ with inlet element, odour trap and drain elbow 45°
35	115	■ with stainless steel rosette, cover plate, valve plug, odour trap and drain elbow 45°

Multiplex M5/M3

Flat version with only 33 mm space requirement behind the bathtub

Drain Ø 52 mm

Equipment set
M5/M3

Fig. 3 – 60 Multiplex M5/M3

Features

- Minimum installation depth behind and under the tub
- Installation depth 33 mm for particularly narrow tub edges
- Low mounting expenditure due to pre-assembled parts
- Chrome-plated valve top of brass
- Easy fixing at the bathtub

Multiplex Visign M5/M3 components

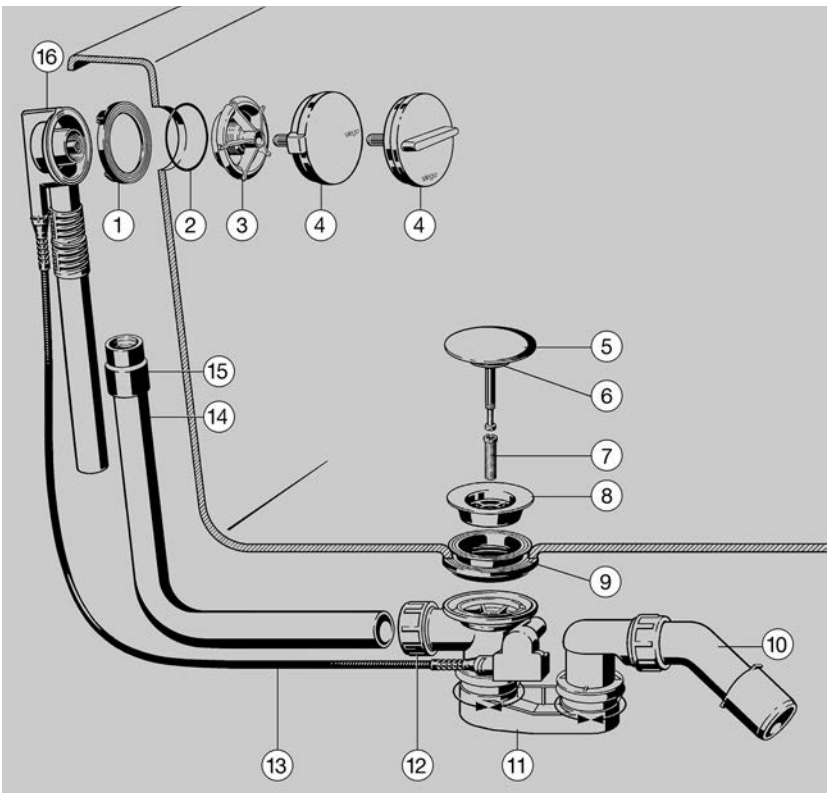

Fig. 3 – 61 Components – Multiplex Visign M5/M3

1 Seal at overflow/inlet
2 O-ring
3 Fixing flange
4 Rotatable rosette
5 Valve cone
6 Valve cone seal
7 Hollow bolt M 12
8 Valve top
9 Drain seal
10 Outlet elbow 45°
11 Odour trap
12 Union nut drain
13 Bowden cable
14 Overflow pipe
15 Sleeve for overflow pipe
16 Overflow unit

Drain Ø 52 mm
Equipment set M9

Multiplex M9
Elevation of water level by 50 mm

.

Fig. 3 – 62 Equipment set M9

Features
- Elevation of water level by 50 mm
- Small installation depth behind the tub edge 33 mm
- Easy mounting due to pre-assembled parts
- Chrome-plated valve top of brass

Multiplex M9 – components

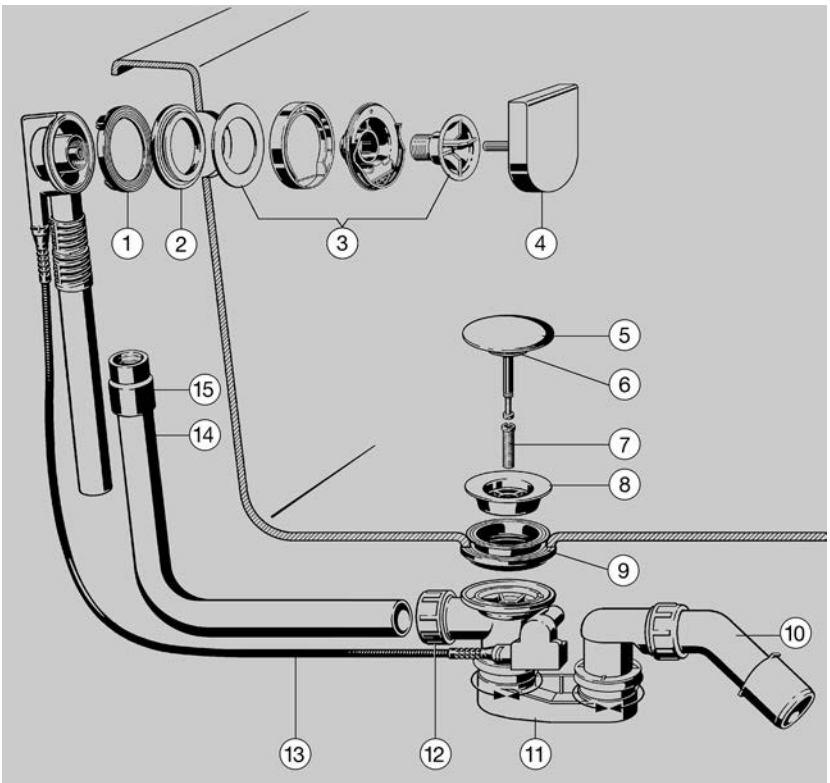

Fig. 3 – 63 Components – Multiplex M9

1. Seal at overflow/inlet
2. Overflow seal
3. Fixing flange
4. Rotatable rosette
5. Valve cone
6. Valve cone seal
7. Hollow bolt M12
8. Valve top
9. Seal at drain
10. Outlet elbow 45°
11. Odour trap
12. Union nut at drain
13. Bowden cable
14. Overflow pipe
15. Sleeve for overflow pipe

Rotaplex R5/R3

Flat version with only 33 mm space requirement behind the bathtub

Drain Ø 90 mm

Equipment sets
R5
R3

Fig. 3 – 64 Rotaplex R5/R3

Features

- Minimum installation depth behind and under the tub
- Installation depth 33 mm for particularly narrow tub edges
- Odour trap accessible from above
- Easy mounting due to pre-assembled components
- Drain and cover plate fixing with three screws only
- Drain with stainless steel flange
- Chrome-plated valve top of brass

Rotaplex Visign R5/R3 components

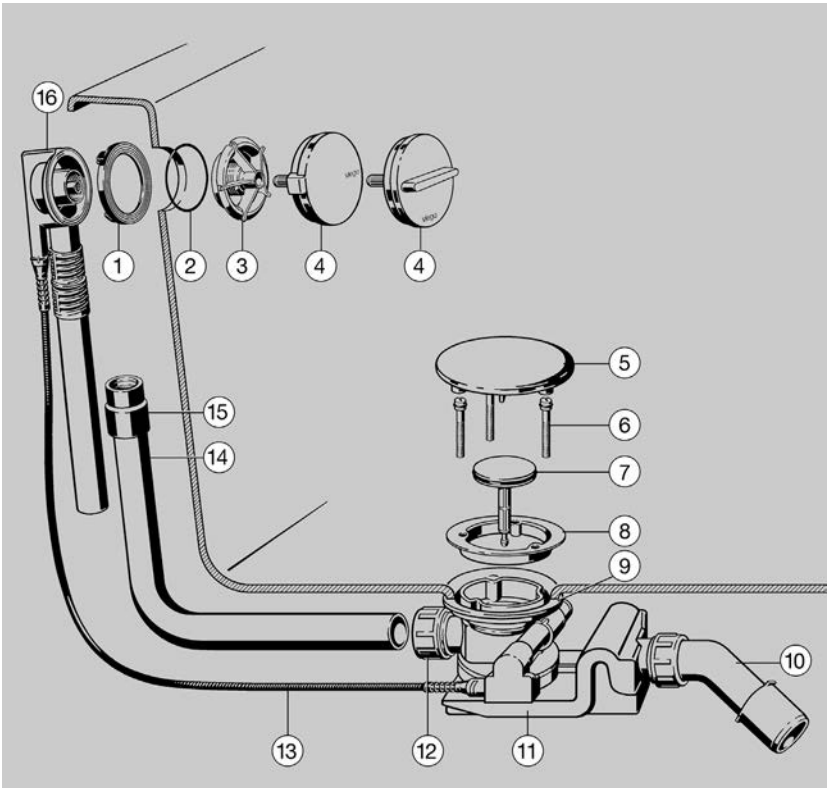

Fig. 3 – 65 Components – Rotaplex Visign R5/R3

1 Seal at overflow/inlet
2 O-ring
3 Fixing flange
4 Rotatable rosette
5 Cover plate
6 Fixing screws
7 Valve cone
8 Fixing flange at drain
9 Seal at drain
10 Outlet elbow 45°
11 Odour trap
12 Union nut at drain
13 Bowden cable
14 Overflow pipe
15 Sleeve for overflow pipe
16 Overflow unit

Citaplex
Drain and overflow

Drain Ø 52 mm
Stainless steel rosette

Fig. 3 – 66 Citaplex

Features
- Odour trap rotatable in all directions
- Valve top and rosette in stainless steel
- Small space requirement behind the tub and below
- Low mounting expenditure due to pre-assembled parts and easy fixing at the bathtub

Drains for shower trays

Tempoplex

For flat shower trays

Fig. 3 – 67 Tempoplex

Fig. 3 – 68 Tempoplex vertical

Drain Ø 90 mm

Tempoplex
Installation height 80 mm

Tempoplex
Vertical drain

Fig. 3 – 69 Tempoplex Plus

Fig. 3 – 70 Tempoplex 60 mm

Tempoplex Plus
Installation height 90 mm
High drainage capacity

Tempoplex 60 mm
Installation height 60 mm

Features

- Easy mounting by stainless steel flange and three stainless steel screws
- Double seal below and above the tub
- Sufficient slope through high arrangement of drain elbow
- Firmly seated cover plate on screws and flange
- Odour trap removable
- Vertical outlet available
- Easy cleaning of the draining line

Drainage capacity according to EN 274

The drains exceed the standard capacities for drains of 0.4 l/s at 15 mm accumulation height

- Tempoplex 0.64 l/s
- Tempoplex Plus 0.85 l/s
- Tempoplex 60 mm 0.55 l/s
- Tempoplex vertical 0.64 l/s

Domoplex

For shower trays with drain opening 52 mm

Drain Ø 52 mm

Fig. 3 – 71 Domoplex

Drainage capacity in accordance with DIN EN 274
0.73 l/s – at 20 mm accumulation height
Requirements of the standard: 0.4 l/s.

Features

- Easy mounting by stainless steel flange and three stainless steel screws
- Double seal below and above the tub
- Space requirement below the tub 80 mm
- Sufficient slope through high arrangement of drain elbow
- Firmly seated cover plate on screws and flange
- Odour trap removable
- Vertical outlet available
- Easy cleaning of the draining line

Varioplex

With removal protection device

Drain Ø 52 mm

Fig. 3 – 72 Varioplex

Features

- Safety screws at drain and overflow cannot be removed any longer after assembly
- Drainage capacity 0.53 l/s at 20 mm accumulation height
- Including odour trap and standpipe
- Drain elbow 45° in DN 40 and DN 50
- Stainless steel valve top
- Minimum space requirement behind and under the shower tray
- Low mounting expenditure due to pre-assembled parts and easy fixing at the bathtub

Drains for washbasins and bidets

Product group

V2

Eleganta odour trap

Fig. 3 – 73 Design odour trap

Equipment

- Cleaning plug
- Long adjustment and outlet pipes
- Large wall connection rosettes
- 2 corner valves

Design odour trap

Eleganta set 1

Design drain valves

Fig. 3 – 74 Universal valve models 5438 / 5440

Fig. 3 – 75 Slotted valve V1 and V2 models 5432 / 5435

Design drain valves

For washbasins with and without overflow

Equipment

- Removable cover plate

Universal valve Visign V1

Fig. 3 – 76 Universal valve – mod. 5439.5

Features

- Of chrome-plated brass
- Lockable with disappearing click lock

Odour traps

Drain and overflow – for washbasins without overflow

Odour traps

In accordance with DIN 1986-100, paragraph 8.2.1

Fig. 3 – 77 Washbasin drain

Fig. 3 – 78 Washbasin drain

Features

- Standpipe and cover plate chrome-plated
- Standpipe extendable – 75 mm height-adjustable

DIN 1986-100, paragraph 8.2.1
Quote:
»Washbasins without an overflow must be equipped with a non-closable drain valve.«

Concealed odour trap

Fig. 3 – 79 Concealed odour trap

Features

- Free space under the washbasin
- Concealed and wall-mounted assembly
- Easy maintenance and installation
- Compact design
- Drain elbow chrome-plated or white

pipe odour traps

Fig. 3 – 80 WB odour trap

Features

Of white plastic

Long adjustment and outlet pipe

Large rosette

Fig. 3 – 81 Bidet odour trap

Features

Of white plastic

Long adjustment and outlet pipe

Large rosette

Advantix floor drainage

Product groups

X1 – X3

Product selection

Advantix drains of high-grade plastic provide solutions for the following areas of application:

- Fire protection
- Conventional sealing – e.g. bituminous sheeting
- Bonded sealing
- Design and bathroom configuration

The following criteria have to be observed for planning and selection of the suitable drain:

- The required drainage capacity – in considering all inlets
- The design of the outlet pipe – vertical/horizontal
- The installation height available in the floor construction
- The selection of the sealing system – conventional/liquid foil
- The size of the grate – 94 or 143 mm
- The version – material and design

Two product lines with different system dimensions are available – see Fig. 3 – 82 and Fig. 3 – 83.

- Bathroom, roof, balcony and terrace drains 100 mm
- Floor drains 145 mm

Drain units, sealing accessories, tops and grates can be combined with each other within the size systems.

Drains with system dimensions 100 mm can also be equipped with 143 mm grates.

Drainage capacities of Viega drains

Type of drain	approx. drainage capacity [l/s]	System dimension [mm]
Bath drain	0.4–1.1	100
Roof, balcony, terrace drain	2.5–3.5	
Floor drain	1.1–1.7	145

Table 3 – 9

To be able to provide reliable solutions, Viega has developed a manageable modular system. The overview tables on the following pages assist in selecting the suitable drain with the associated accessories.

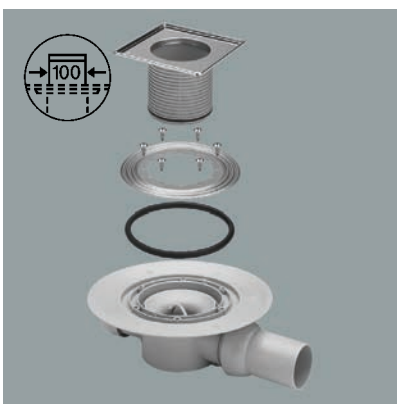

Fig. 3 – 82 Bath drain

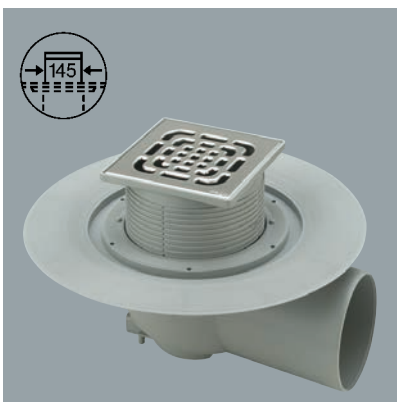

Fig. 3 – 83 Floor drain

System dimensions

Bath drain 100 mm

Floor drain 145 mm

Viega Advantix configurator
Many selection criteria have to be observed for the selection of the appropriate floor drain in the planning phase: Shower channel or conventional drain model, arrangement in the room, sealing in the floor construction, fire protection aspects, grate design, etc.
The Advantix configurator visualising all design variants in the individual construction situation makes the search for the suitable product easier and prepares a final summary of all the necessary information.
Filter functions allow targeted searching according to the requirements of the building owner, the planner and the installer.

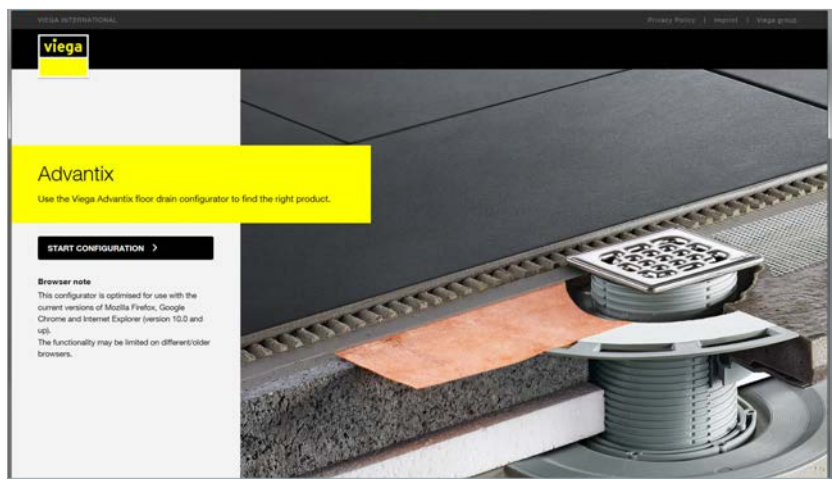

Fig. 3 – 84

Filter functions allow targeted searching with all available Advantix bathroom and floor drains being available for visualisation.

Search criteria are:
- Shower channel, point drain or fire protection floor drain
- Sealing, tile and screed height and insulation thickness
- Type of drain and drainpipe size
- Grate design

The configuration result can be printed directly or downloaded and contains the following:
- list of materials of all required items
- sectional drawing of the selected floor construction
- supplementary important notes

Configuration sequence

Selection: Shower channel – point drain – fire protection drain

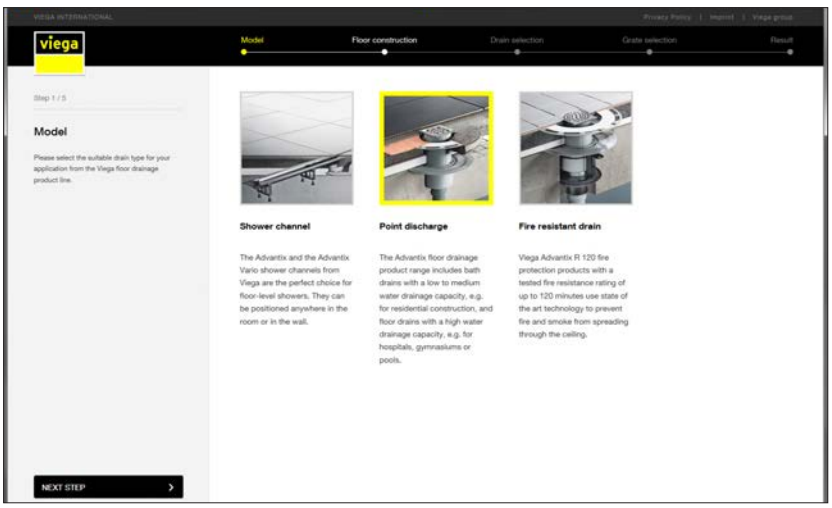

Fig. 3 – 85

Selection: Sealing – tile/screed height – insulation

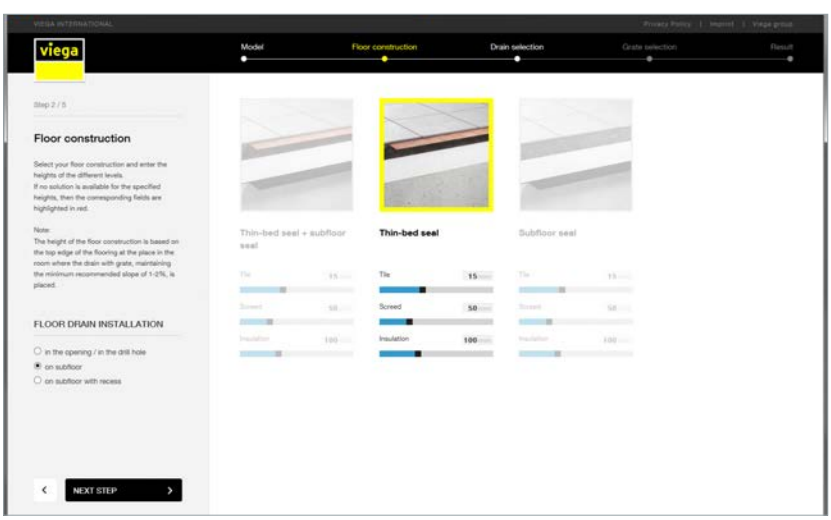

Fig. 3 – 86

Selection: Drain size – drain type

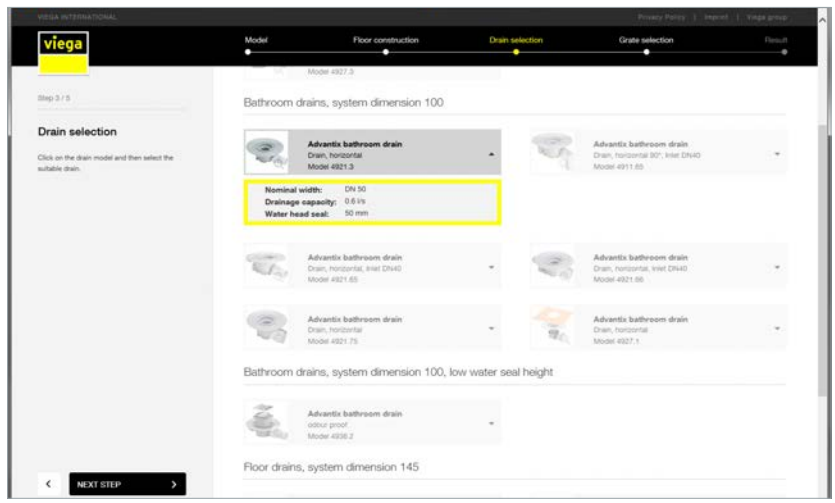

Fig. 3 – 87

Selection: Grate design

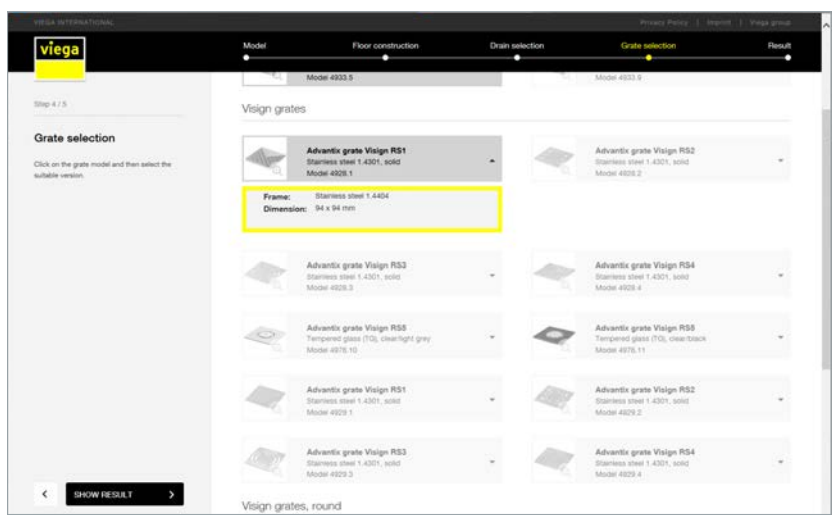

Fig. 3 – 88

Result – configuration summary

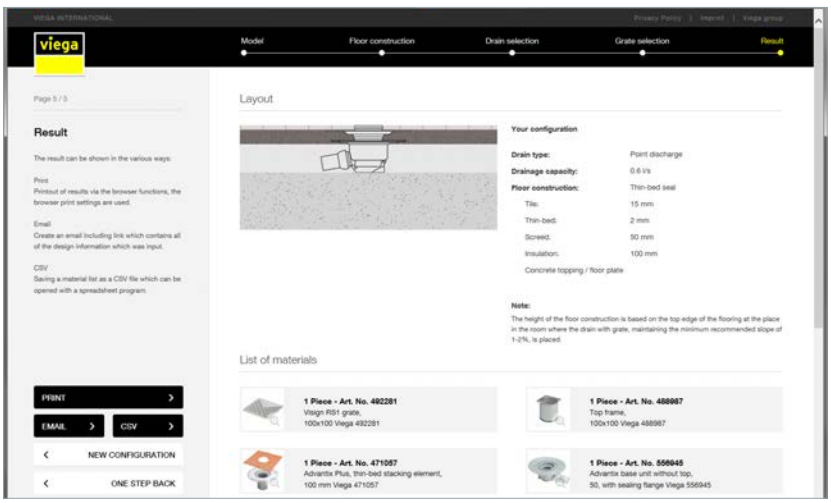

Fig. 3 – 89

The configuration summary contains all information necessary for planning and implementation.

- Configuration result overview
- Material/ordering lists for the necessary components
- Sectional drawing of the floor construction
- Supplementary information/tips for planning and implementation

The summary can be printed or downloaded.

Overview of bathroom, balcony/terrace drains

System dimension 100 mm

Level 1
Tops

Level 2
– accessories
– sealing

Level 3
Drains for
– bathroom
– balcony
– terrace

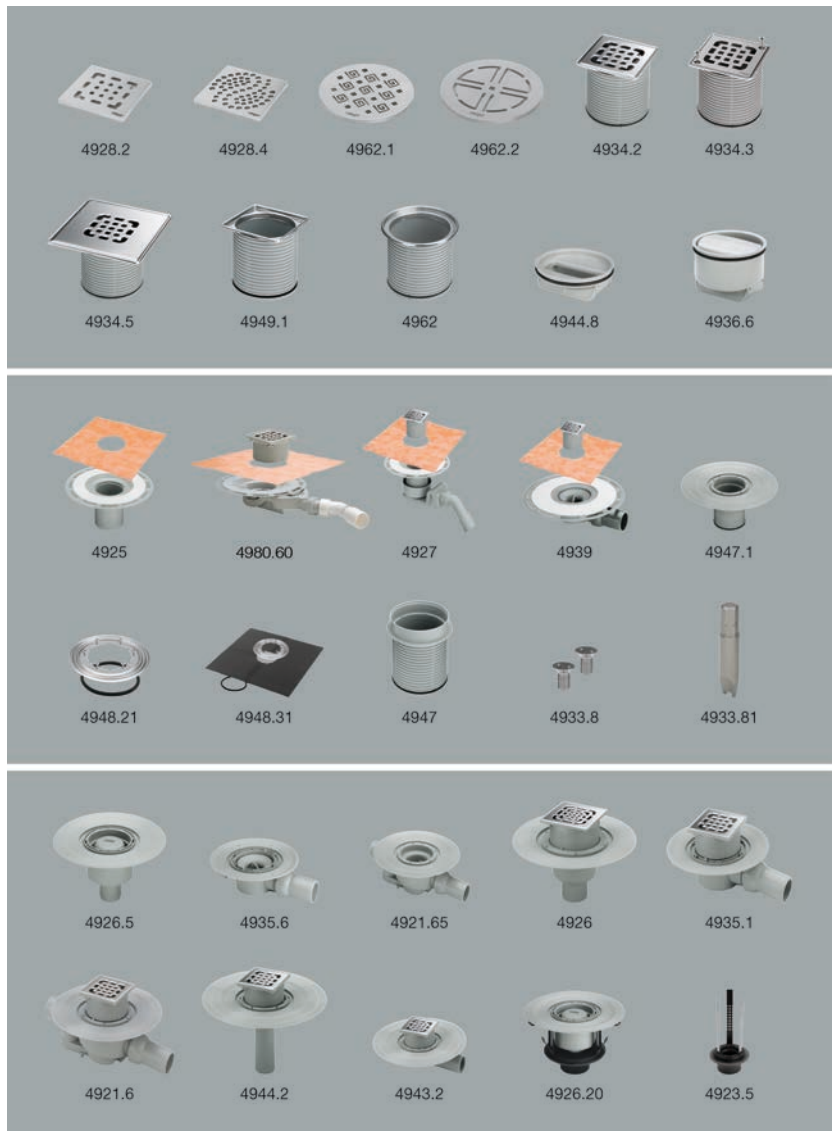

Fig. 3 – 90 Advantix – overview system dimension 100

Overview Advantix floor drains

System dimension 145 mm

Level 1
Tops

Level 2
– accessories
– sealing

Level 3
Floor drains

Fig. 3 – 91 Advantix – overview system dimension 145

Bath drains for floor-level showers – overview

Minimum construction height upper edge raw concrete to upper edge screed [mm]	**62**	**70–85**	**85–120**	**95–185**	**110–220**	**20–105**
	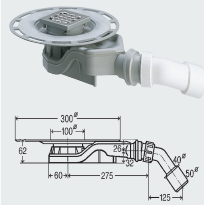	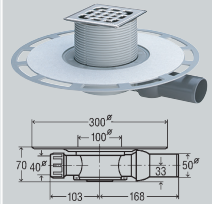	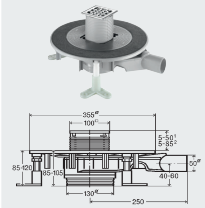	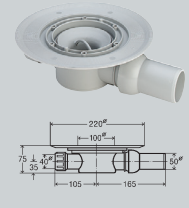	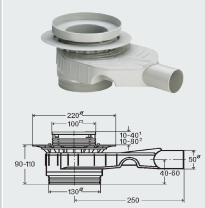	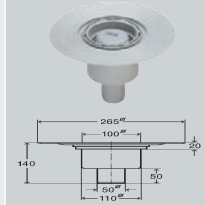
DN	40/50	50				
Viega models	**4980.63** Without top **4980.61** With top: Frame and grate of stainless steel **4980.60** With top: Frame of plastic, grate of stainless steel	**4938** Without top **4939** With top: Frame and grate of stainless steel	**4914.2** Without top **4914.20** With top and grate of stainless steel: Art. no. 669249 with plastic frame Art. no 669249 with stainless steel frame	**4935.6** Without top **4935.1** With top: Frame of plastic, grate of stainless steel	**4927.3** Without top **4914.10** With top and grate of stainless steel: Art. no. 669195 with plastic frame Art. no 669201 with stainless steel frame	**4926.5** Without top **4926** With top: Frame of plastic, grate of stainless steel Installation in drill hole
Grate [mm]	100 x 100					
Drainage capacity [l/s]	0.5	0.5	**Model 4914.2:**0.8–1.2 **Model 4914.20:** 0.8–1	0.6	**Model 4927.3:** 0.8–1.2 **Model 4914.10:** 0.8–1	0.9
Water seal level [mm]	25	30	30–50	30	35–50	50
Suitable for bonded sealing	yes			In combination with stacking element **Model 4925**	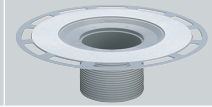	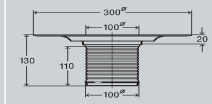
Load class [kg]	300					

Table 3 – 10

Advantix bath drains

Advantix bath drains are suitable for the flow-through of small to medium water volumes, e.g. in private housing.

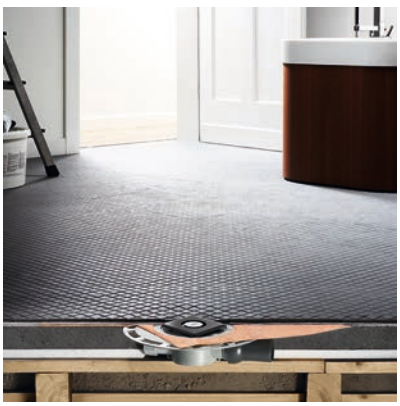

Fig. 3 – 92 Floor drain – slimline

Fig. 3 – 93 Complete drain

Bath drain

Slimline, for refurbishment of old buildings

Slimline, as complete drain

Features

- System dimension 100 mm
- Drainage capacity max. 1.1 l/s
- Drain DN 40 / 50 or DN 70
- Inlet DN 40
- Grate size 95 x 94 mm or 143 x 143 mm
- Grates made of stainless steel, material No. 1.4301 or 1.4404
- Sealing flange for accommodation of the sealing lane or bonded sealing
- Removable odour trap or self-cleaning
- Fire protection class B2

Advantix bath drains system 100 – drainage capacities **1 / 2**

Viega product		Model	Nominal width	Construction height to flange upper edge min–max [mm]	Drainage capacity at accumulation height over the grate			Water seal level[2] [mm]
					According to DIN EN 1253[1]	10 mm	20 mm	
					[l / s]			
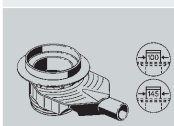	Advantix Top bath or floor drain	4927.3	DN 50	90–10	0.80	0.75–1.2[3]	0.80–1.20[3]	35–50 mm
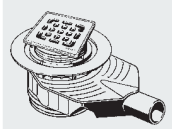	Advantix Top bath drain	4914.10	DN 50	90–110	0.80	0.75–0.95	0.80–1.00	35–50
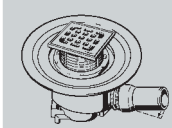	Advantix bath drain	4921.76	DN 50	115	0.80	0.60	0.90	50
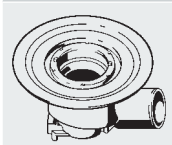	Advantix bath drain	4921.75	DN 70	115	0.80	0.70	1.10	50
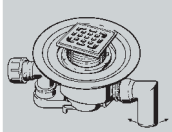	Advantix bath drain	4911.6	DN 50	115	0.80	0.55	0.90	50
	Advantix bath drain	4926	DN 50	140	0.80	0.70	0.90	50
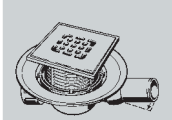	Advantix bath drain	4935	DN 50	75	0.80	0.40	0.60	30

Table 3 – 11

[1] For accumulation height 20 mm: Use of floor drain without lateral connections because the minimum drain value must be 0.4 l/s for the wastewater drain of a single showerhead.

[2] 50 mm required according to DIN EN 1253

[3] Depending on the size and the height of the top

2/2

Viega product		Model	Nominal width	Construction height to flange upper edge min–max [mm]	Drainage capacity at accumulation height over the grate [l/s]			Water seal level[2] [mm]
					According to DIN EN 1253[1]	10 mm	20 mm	
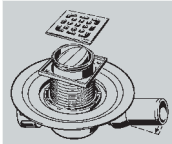	Bath drain	4936.2	DN 50	75	0.80	0.33	0.40	50
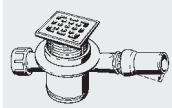	Advantix bath drain	4921.4	DN 50	115	0.80	0.55	0.90	50
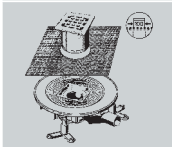	Advantix bath drain	4914.20	DN 50	85–20	0.80	0.75–0.95	0.80–1.00	35–50
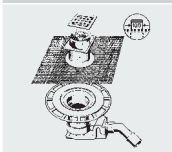	Advantix bath drain	4927	DN 40/50	85–155	0.80	0.40	0.55	50
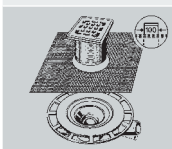	Advantix slimline bath drain	4939	DN 50	70	0.80	0.45	0.50	30
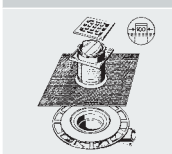	Bath drain	4936.4	DN 50	70	0.80	0.33	0.40	50
	Advantix bath drain 62 mm	4980.60	DN 40/50	62	0.80	0.50	0.55	25

Advantix floor drains system 145 – drainage capacities

Viega product		Model	Nominal width	Construction height to flange upper edge min–max [mm]	Drainage capacity at accumulation height over the grate			Water seal level[2] [mm]
					According to DIN EN 1253[1]	10 mm	20 mm	
					[l/s]			
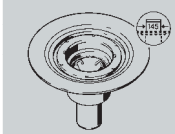	Advantix bath drain	4951.1	DN 50	160	0.80	0.65	1.50	50
			DN 70	175	0.80	0.70	1.60	50
			DN 70/100	190	1.40	0.90	1.40	50
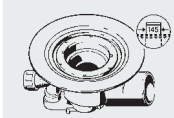	Advantix floor drain	4955.1	DN 70	120	0.80	0.60	1.10	50
			DN 100	130	1.40	1.20	1.70	50
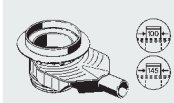	Advantix Top bath or floor drain	4927.3	DN 50	90–110	0.80	0.75–1.20[3]	0.80–1.20[3]	35–50
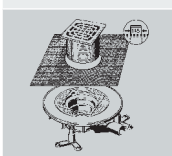	Advantix floor drain	4914.21	DN 50	85–120	0.80	0.85–1.15	0.90–1.20	35–50

Table 3 – 12

[1] For accumulation height 20 mm: Use of floor drain without lateral connections because the minimum drain value must be 0.4 l/s for the wastewater drain of a single showerhead.

[2] 50 mm required according to DIN EN 1253

[3] Depending on the size and the height of the top

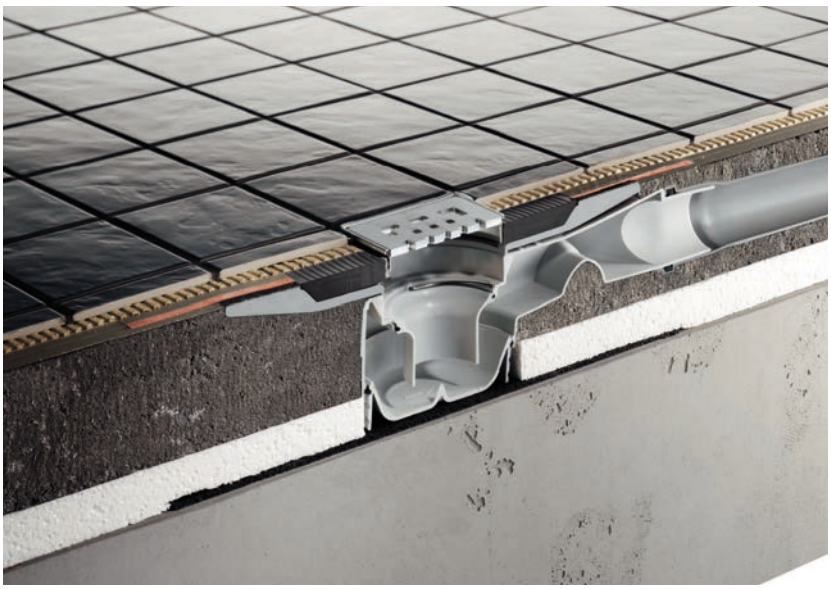

Fig. 3 – 94

Advantix balcony/terrace drains

Advantix balcony and terrace drains are suitable for large water volume flow-through and have no water seal odour trap.

Balcony and terrace drains

Outlet pipe
– vertical with grate
– horizontal with pebble trap

With shutter valve odour trap and sieve insert

Fig. 3 – 95 Horizontal outlet

Fig. 3 – 96 Vertical outlet

Features

- System dimension 100 mm
- Grate size 100 mm or 150 mm

Horizontal and vertical drain

Drainage capacity

Advantix terrace drain	Size/nominal drainage capacity according to 1253 [l/s]		
	DN 50/0.9	DN 70/1.7	DN 100/4.5
	2.5	3.0	4.5 with sieve insert

Table 3 – 13

Mounting example

Terrace drain

With conventional sealing and pebble trap inlet element

Odour barrier

frost proof, for installation in tops

Fig. 3 – 97 Terrace drain

Fig. 3 – 98 Odour barrier

Advantix floor drains

Advantix floor drains are suitable for handling large volume flows of water, e.g. in hospitals, sports halls and swimming pools.

Fig. 3 – 99 Complete drain – horizontal

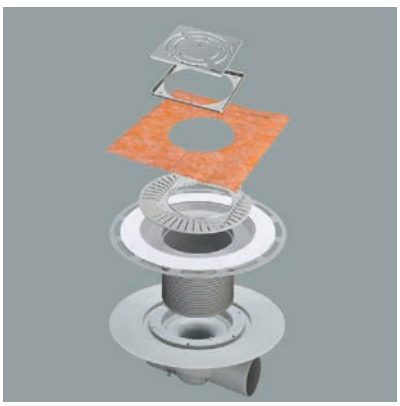

Fig. 3 – 100 Stacking element

Horizontal floor drains

With grate

With stacking element of plastic, eccentrically adjustable

Fig. 3 – 101 Complete drain – vertical

Vertical floor drains

With grate of solid 5 mm stainless steel

Features

- System dimension 145 mm
- Grate size 150 mm

Mounting examples

Advantix floor drain

With conventional double sealing

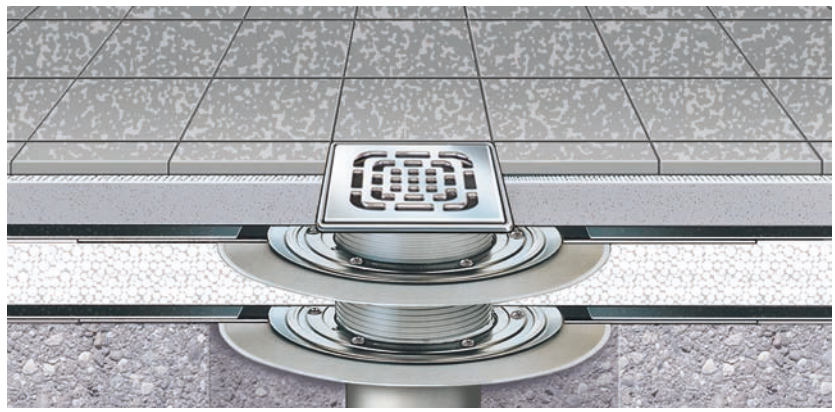

Fig. 3 – 102 Conventional sealing

Advantix floor drain

With stacking element for the bonded sealing and inlet from a wash-basin

Advantix bath drain 62 mm

For renovations

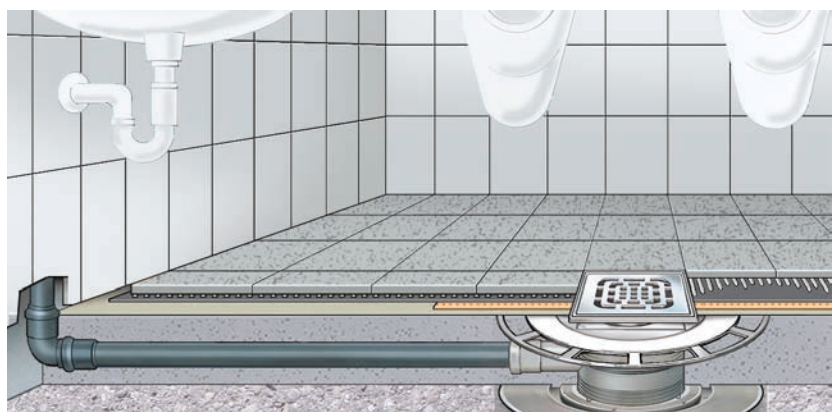

Fig. 3 – 103 Bonded sealing

Advantix bath drain 62 mm

Fig. 3 – 104 Advantix bath drain 62 mm

The drain is particularly suitable for low floor constructions often inevitable in the case of refurbishments. The flange is optimised for safe integration with bonded sealing systems.

Features

- Flat installation height 62 mm up to upper edge of thin bed flange
- Drainage capacity 0.5 l/s at 10 mm accumulation height
- Drain elbow laterally adjustable

Advantix bath drain 70 mm

This slimline bath drain is particularly suitable for low floor constructions, e.g. for refurbishments of old buildings. The sealing flange equipped with a mat ensures that liquid foils are safely accommodated. The figure shows a shower drain with a double bonded sealing and Schlüter-KERDI sealing collar for the crossover from the drain area to the screed. The reinforcements at the flange rim ensures additional steady anchoring.

Advantix bath drain 70 mm

Base unit with ball joint drain socket

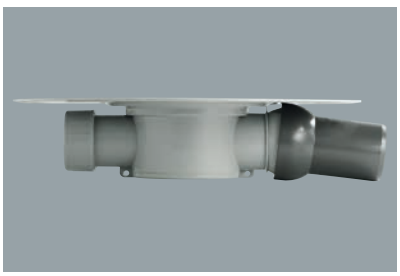

Fig. 3 – 105 Drain – 70 mm

Advantix bath drain 70 mm

– Slimline
– With lateral inlet

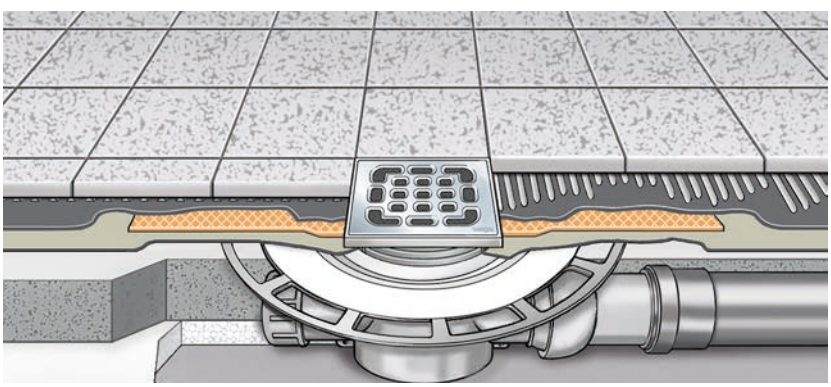

Fig. 3 – 106 Bath drain

Features

- Minimum construction height 70 mm up to upper edge of flange
- Drainage capacity 0.5 l/s
- Accessories need not be shortened (one-piece design)
- With lateral inlet DN 40
- Outlet pipe DN 50 adjustable by ball joint
- Water seal level 30 mm

Advantix – odour proof drains
Standard floor drains for living rooms are predominantly equipped with a 50 mm water seal odour trap intended to prevent that sewer gas gets into living and working rooms. The water seal protection of seldomly used drains may fail due to evaporation of the water seal. Unpleasant odours occur that may cause problems especially in public facilities. Advantix odour proof drains have, in addition to the water seal, an odour trap insert with two shutter valves reliably preventing that sewer gas escapes.

Advantix bath drain

- Slimline, odour proof
- With integrally moulded flange for the bonded sealing

Advantix odour barrier

Function

- When water is drained
- When the odour trap is dried out

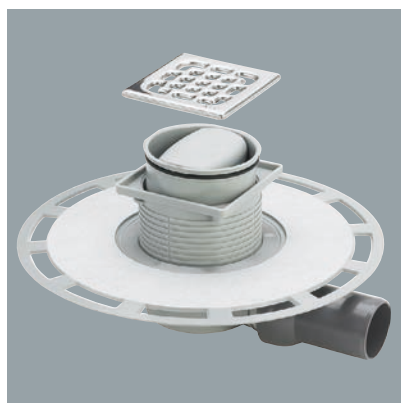

Fig. 3 – 107 Bonded sealing

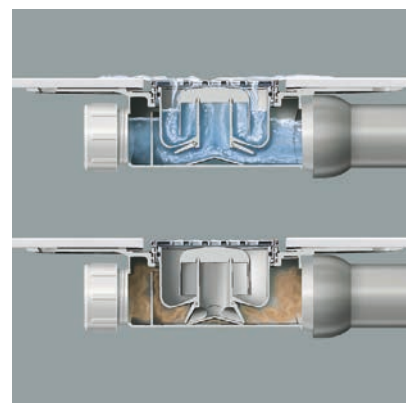

Fig. 3 – 108 Odour barrier

Features

- Each Viega top of Ø 100 mm can be retrofitted
- Double odour trap – water seal and shutter valves
- Can be used for conventional and thin bed sealing
- Drainage capacity approx. 0.45 l/s
- Complete drain in superslim design
- Water seal level 30 mm
- Shutter valves open and close autonomously when water drains
- Base unit model with horizontal and vertical outlet pipes

Advantix stacking element made of plastic
Advantix Plus stacking elements are intended for being integrated with liquid sealing systems. The thin sealing flange allows installation in floor constructions with a particularly small construction height.

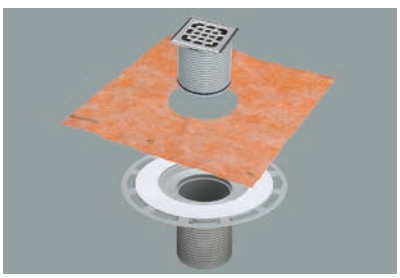
Fig. 3 – 109 Stacking element

Features
- Particularly flat design.
- Mat lining as the optimal adhesive surface for the first sealing layer
- Schlüter-Kerdi sealing collar between the first and second liquid foil layer as a safe crossover from the drain to the screed
- Reinforcement at the flange rim anchor the drain in the screed
- Stacking element with uncomplicated handling and stopper
- Can be combined with all bath, floor, balcony/terrace drains

Advantix Plus thin bed stacking element
Of plastic

Plug-in drains

Plug-in drains are intended for being used in floor constructions without sealing – e.g. terraces with tiles laid immediately on the soil or cellars in which smaller amounts of wastewater occur at irregular intervals.

For the purpose the drain is inserted with a multiple-lip seal in a pipe end or sleeve of a PVC or HT-resistant pipe and adjusted to the height of the floor covering.

The drains can be used for pipes and sleeves with an inside diameter from 98 mm to 105 mm.

Plug-in drain

As an »emergency drain« in the laundry room

Fig. 3 – 110 Cellar drain

Features

- Grate frame and grate of high-grade stainless steel – load class K3
- Odour trap can be removed easily – wastewater pipe Ø 90 mm
- Height-adjustable from 30 to 95 mm (upper edge wastewater pipe to top edge stainless steel frame) – 3 sealing lips must remain in the pipe for sealing
- Suitable grate sizes 94 x 94 mm, designs: drawn, solid or as a closing panel
- Odour trap insert available as a separate item

Equipment variants/water seal level/drainage capacity

Odour trap	50 mm	0.75 l/s
Odour trap + shutter valve	30 mm	0.45 l/s
Shutter valve frost proof	–	0.70 l/s

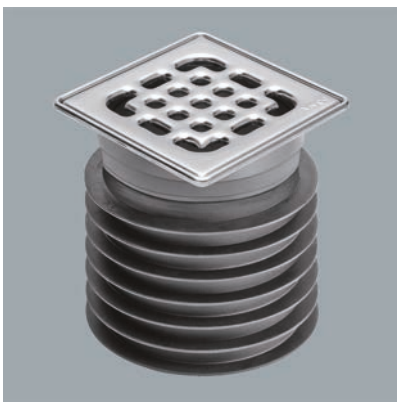

Fig. 3 – 111 Plug-in drain

Fig. 3 – 112 Water seal 50 mm

Plug-in drains

With 7 sealing lips and drawn stainless steel grate

Variant with 50 mm water seal odour trap

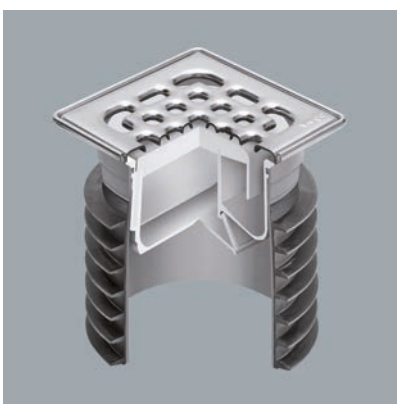

Fig. 3 – 113 Water seal 30 mm

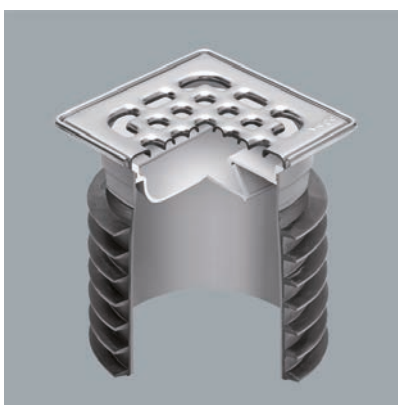

Fig. 3 – 114 Frost proof

Variant with 30 mm water seal odour trap

»odour proof«

Variant »frost proof« with backflow flap

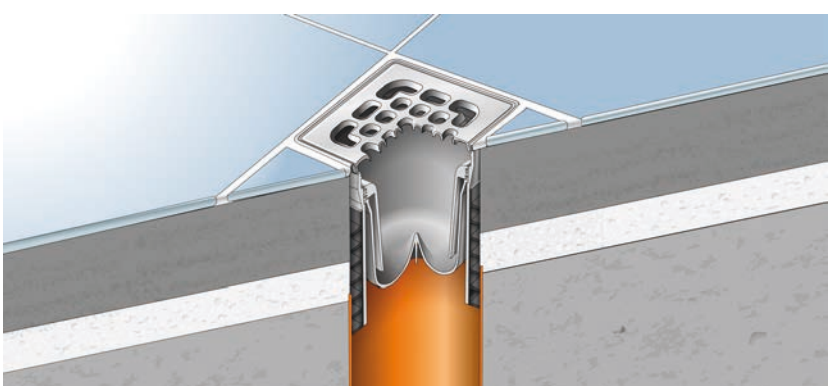

Fig. 3 – 115 Mounting example plug-in drain

PVC pipe on raw concrete level with mounted plug-in drain

Design products

Advantix shower channel
Viega Advantix shower channels are available in the new reduced design. The width of the common round and angular model variants of the grates had been reduced to 40 mm and can be integrated unobtrusively in floor and wall structures. The drain units can be individually adjusted and allow safe mounting with few components in each floor construction of new and old buildings.

Fig. 3 – 116 Advantix shower channel

Grates and frames in round and angular standard and design variants.

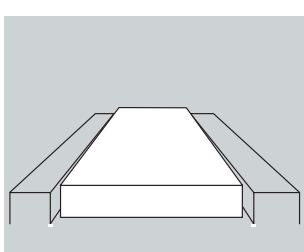

Fig. 3 – 117 Angular grate and frame

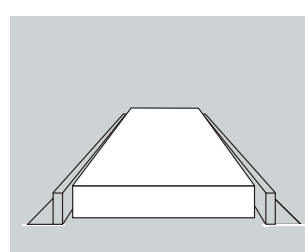

Fig. 3 – 118 Standard

Features

- Drains: Construction heights 95/70/40 mm
- Base unit
  - Model 4982.10 for mounting on the floor
  - Model 4982.20 for mounting at the wall
- Frames and grates
  - Lengths: 750/800/900/1000/1200 mm
  - Widths 40 mm
  - Design variants: angular, rounded off, of glass or for being covered with individual coverings.

Advantix shower channel – drain models

Construction height [mm]	Model	Drainage capacity l/s	Water seal level [mm]	Special feature
95	4982.92	0.50–0.55	50	Can be shortened to 70 mm
70	4982.93	0.40–0.45	25	
40	4982.94	0.9–1.10	50	Drainpipe vertical fire protection sealing possible

Table 3 – 14

Assembly

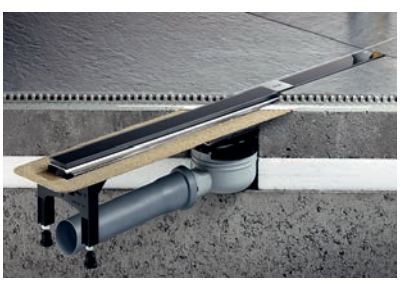

Fig. 3 – 119

For all other models the pipeline can be routed in parallel under the channel – the drainpipe is located outside of the screed.

Fig. 3 – 120

Model 4982.92 of the drain is rotatable by 180° degrees and can be shortened by sawing off and plugging together to the construction height 70 mm.

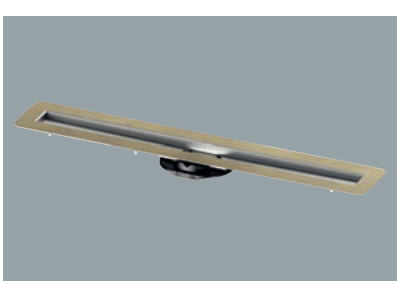

Fig. 3 – 121

Base unit for mounting with feet on the bare floor

Fig. 3 – 122

Base unit for mounting at the wall

Advantix Vario shower channels/wall drains
The product range includes shower channels and wall drains. It is characterised by its variability for arrangement on the floor or at/in the wall. The option of mounting at right angles, free in the room or at the wall directly provides room for creativity and brings technical advantages for the implementation.

Fig. 3 – 123 Advantix Vario shower channel

Fig. 3 – 124 Advantix Vario wall drain

Features

Advantix Vario shower channels

- Routing variants: In a straight line in the room, at the wall, L and U-shape with leg lengths ≤ 1600 mm
- Routing lengths 300–2800 mm
- Height adjustable 95–165 mm
- 2500 mm connection lines possible for standard slopes
- Drainage capacity depending on the installation situation 0.4–0.8 l/s – can be doubled by connecting two shower channels
- Safe odour trap
- Convenient cleaning of base unit

Advantix Vario wall drains

- Routing variants: In the wall, at the right or left at the side wall, in the shower niche
- Routing lengths 300–1200 mm
- Wall installation depth 25 mm
- Wall/floor covering thickness max. 28 mm
- Drain height adjustable 90–165 mm
- Drainage capacity 0.6–0.75 l/sec
- With a stainless steel grate the drain slot height 20 can be reduced to 8 mm over and under the grate.
- Laying the floor covering without slope cuts
- Convenient cleaning of base unit

Assembly

Fig. 3 – 125 Advantix Vario wall drain

Fig. 3 – 126 Advantix Vario shower channel

The assembly steps for the wall drain and the shower channel are almost identical.

- Cut channel base unit to length with a hacksaw and saw guide.
- Plug on and screw closing caps.
- Determine the construction height of the finished floor, adjust the drain using the adjustable feet, shorten and install height adjustment piece.
- Align the shower channel and connect it with the drain pipe.

Finally it is necessary for the wall drain to align and install the tile rail in coordination with the tiler.

Design grates

»Adventure showers« with innovative ideas and unusual shapes require the drain technology to be adjusted and an appropriate variety of geometric shapes and designs. Viega focuses in the field of shower channels and design grates on nine high-grade design variants with all options for individual bathroom configuration.

The Visign grate ER 4 allows inserting individual materials matching with the floor coverings in a stainless steel profile.

Fig. 3 – 127 Design grate round

Fig. 3 – 128 Advantix top – covered with tiles

Black glass

For bath and floor drains – round or square

Stainless steel grates

Viega Design grates for Advantix bath and floor drains are manufactured of high-grade solid stainless steel of the thickness 5 mm and have a mat surface.

Stainless steel grates can stand even high loads and harsh cleaning agents. Stainless steel creates an elegant crossover from the grate to the tile and ensues full functionality even after many years.
Four round design variants allow perfect integration in small-size tile or quarry stone floors. Grate models RS 11 to RS 14 are particularly suitable for bathrooms in which flowing contours dominate while the square models RS 1 to RS 4 can be integrated particularly well in tile patterns.

Round grates

RS 11 to RS 14

Grate RS 12 in round shower

Fig. 3 – 129 Design grates RS 11 to RS 14

Fig. 3 – 130 Design grate RS 12

Square grates

RS 1 to RS 4

Grate RS 2 arranged centrally in square tile pattern

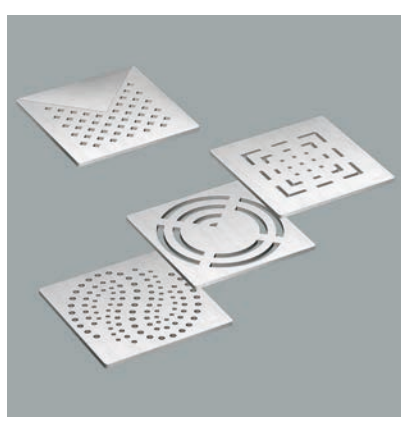

Fig. 3 – 131 Design grates RS 1 to RS 4

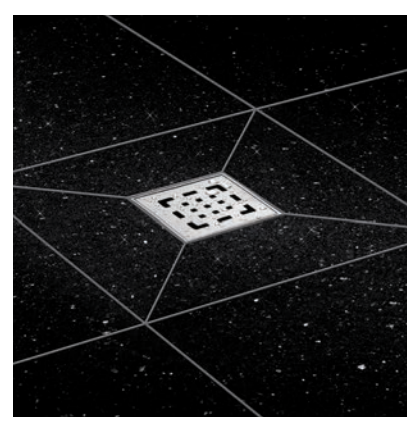

Fig. 3 – 132 Design grate RS 2

Glass covers

The grates for all Advantix drains are also available in black or light-grey tempered glass (TG) with frames of stainless steel as a seamless crossover with the tile surface.

Fig. 3 – 133 Glass cover ER 9

Square grate
RS 5
Round grate
RS 15

Fig. 3 – 134 Glass cover RS 5

Fig. 3 – 135 Glass cover RS 15

Glass cover ER 9
Black version

Advantix fire protection floor drain

Advantix floor drain R120

Floor drains and pipe lead-ins of drains, e.g. of barrier-free showers, have to be made fire-proof as a part of the pipeline installation if this is required. Viega product series R120 with the building inspectorate approval from the Deutsches Institut für Bautechnik in Berlin, no.: Z-19.17-1770 was especially developed for these applications.

Product range R120

- Advantix pipe lead-in R120
- sealing material
- drainpipe
- bath drain DN50
- floor drain DN70

Fig. 3 – 136 Advantix floor drain R120 – accessories

Advantix pipe lead-in R 120

Advantix pipe lead-in R 120

With brackets for mounting in the bare floor

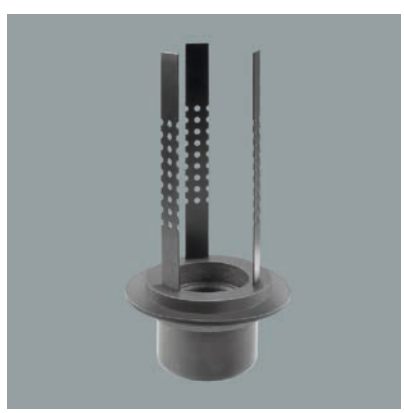

Fig. 3 – 137 Advantix pipe lead-in R 120

The best technical solution for the installation of Advantix floor drains R120 in storey floors is insertion in a drill hole using the Advantix pipe lead-in R120.
For the drill hole diameters required for Viega floor drains when using the Advantix pipe lead-in R120, see Table 3 – 15.
Floor lead-ins of shower tray drains (Tempoplex, Domoplex etc.) or horizontal bath and floor drains can also be made fire-proof.

The Advantix pipe lead-in R 120 can be installed in a few steps in a prepared drill hole:

- Create drill hole.
- Fix Advantix pipe lead-in R 120 in place.
- Install drainpipe.
- Stuff the hollow space above the pipe lead-in with loose mineral fibre wool included in the delivery.

Fig. 3 – 138 Advantix pipe lead-in R 120 – mounting example

Advantix pipe lead-in R 120

Filling of the hollow floor space with mineral fibre wool

melting point >1000 °C

Drill holes

R 120	ø [mm]	Art. No.
Bath drain	150–162	491642
Floor drain	180–202	491659 491666
Pipe lead-in	100–122	491673

Table 3 – 15

Features

- For floor constructions ≥ 150 mm, consisting of bare floors with t_{min} = 100 mm plus floor constructions (screed, reinforcement, etc.)
- Sizes DN 50 and DN 70
- Easy to install
- No cement stabilisation
- Single component, no tools necessary for mounting
- Compliance with all requirements for fire protection, even in special constructions
- High degree of safety

Components

Advantix bath drain R 120

With top frame for the bonded sealing

Fig. 3 – 139 Bath drain

Component designation

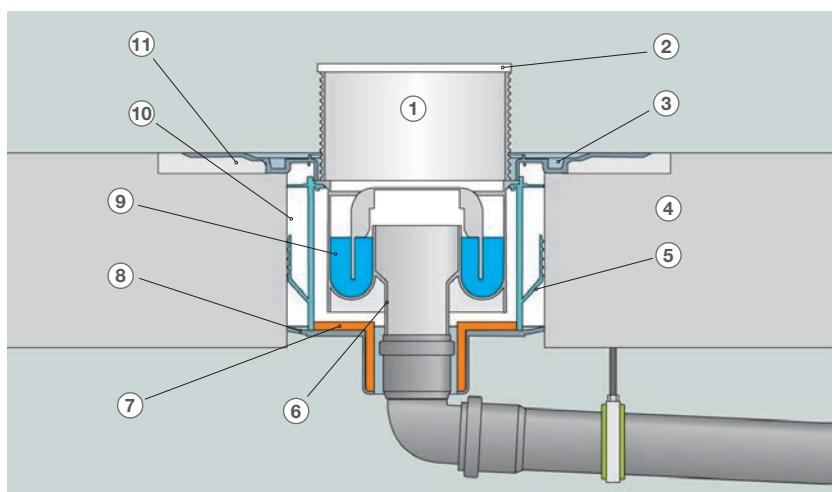

Fig. 3 – 140 Components Advantix bath drain R 120

1. Top
2. Grate
3. Sealing flange Ø 380 mm
4. Bare floor ≥ 150 mm
5. Bracket
6. Connecting piece
7. Fire protection swelling compound
8. Fire protection cover
9. Water seal
10. Drill hole Ø 200 mm
11. Floor opening Ø 400 mm

Operating mode

Advantix fire protection drains R 120 are used to prevent the fire from spreading through the floor. This is achieved by a compound swelling when exposed to heat integrated in the fire protection sleeve.

After a few minutes already the drainpipe of polypropylene has melted and dripped off. The swelling compound starts sealing the free cross sections in the lead-through area. If the lower part of the casting compound breaks off, the mortar anchors of the fire protection sleeve going far up ensure that the floor drain is held in the floor.

Fire development

Function Advantix fire protection drain R 120

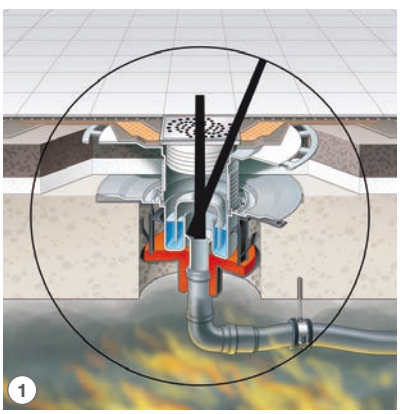

Fig. 3 – 141

Start of the fire + 4 min

The plastic pipe becomes plastic.

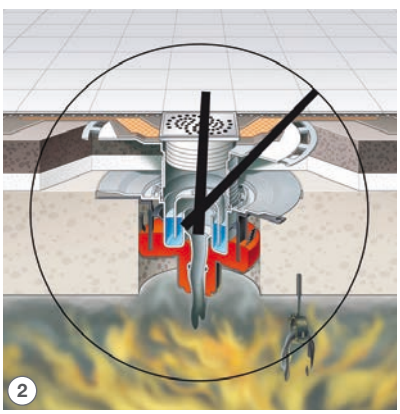

Fig. 3 – 142

Start of the fire + 8 min

The plastic pipes are melted off and the foaming construction material starts filling the entire drill hole.

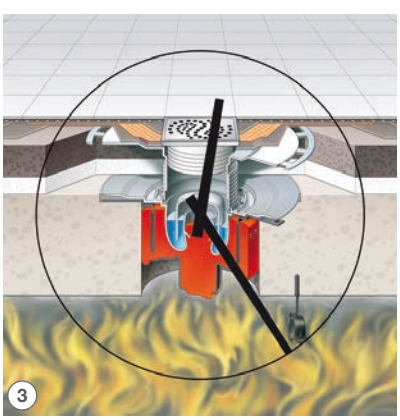

Fig. 3 – 143

Start of the fire + 25 min

The entire drill hole is closed and the water seal is largely maintained.

Installation in drill holes

All Viega products of the Advantix-R 120 series have the general building inspectorate approval Z-19.17-1770. They are suitable for being installed in concrete, reinforced concrete or aerated concrete floors of the minimum thickness 100 mm if the entire floor thickness including compound screed or floor installation panels is ≥ 150 mm.

Floor installation panels (e.g. calcium-silicate panels) or concrete bases to achieve the required fire resistance class have to be laid at least 100 mm around the drill hole and with the thickness of 30 mm. Mounting on or below the floor is permissible in using thorough threaded rods ≥ M8 for fixing. § 22 of the German Model Building Code applies for the use of floor installation panels and therefore no special proofs of suitability are required – Quote:

»... non-essential deviations are considered as compliance in the sense of the regional building code« ...

Floor installation panels

For achieving the required fire resistance class

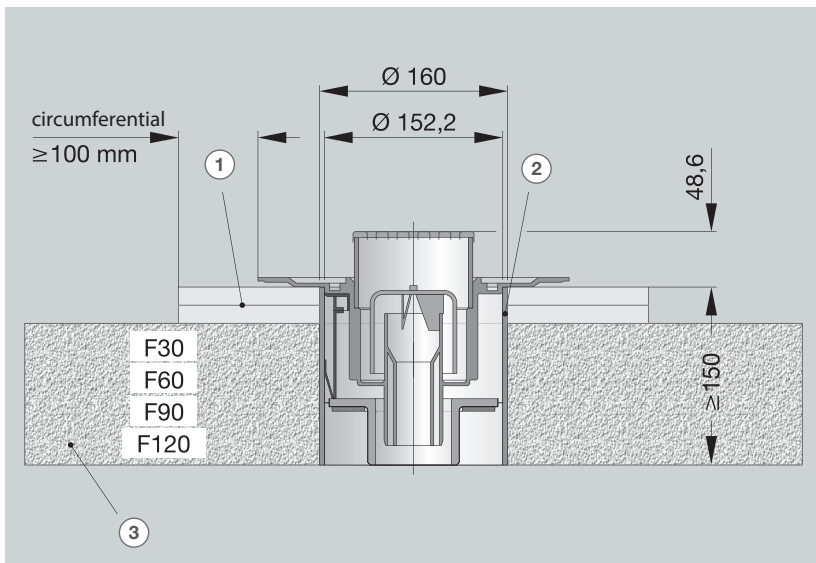

Fig. 3 – 144 Advantix floor drain R 120 – in drill hole with floor installation panels

(1) Floor installation panels
(2) PP pipe
(3) Bare floor

Special solutions

Fire protection floor drains and pipe lead-ins in special floors (timber joist ceilings, ribbed or bricked ceilings, hollow chamber ceilings, etc.) can also be made according to the facilitations of German MLAR / LAR / RbALei.
In most isolated cases the approval of the superior construction supervision authority is not required. However, the implementation of a floor breakthrough has to be always discussed with a structural engineer and the on-site fire protection expert and/or specialist construction manager responsible for fire protection (if necessary, the proof of suitability/expert opinion for keeping with building law has to be obtained).

Floor breakthrough

"In-pipe" method with Advantix floor drain R 120 model 4951.20

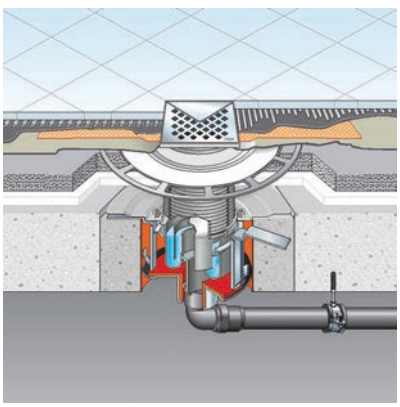

Fig. 3 – 145 "In-pipe" method

Pipe lead-ins are always made in the fire resistance class of the floors/existing floors. The "in-pipe" method is applied for Viega Advantix pipe lead-ins through room ceilings in the special models above or for asymmetrical floor breakthroughs.
A PP or PVC pipe is fixed with mortar in the floor breakthrough. After the mortar has cured, the Advantix pipe lead-in R 120 or an Advantix-R 120 drain is inserted.

The specifications in the approval and the mounting instructions attached to the products have to be observed for mounting the Advantix-R 120 products in special floors.

Installation in a drill hole is always an advantage in cases if special precision is required when the drain is positioned later – e.g. for aligning the Advantix shower channel.

Advantix shower channel

With connection to pipe lead-in R 120

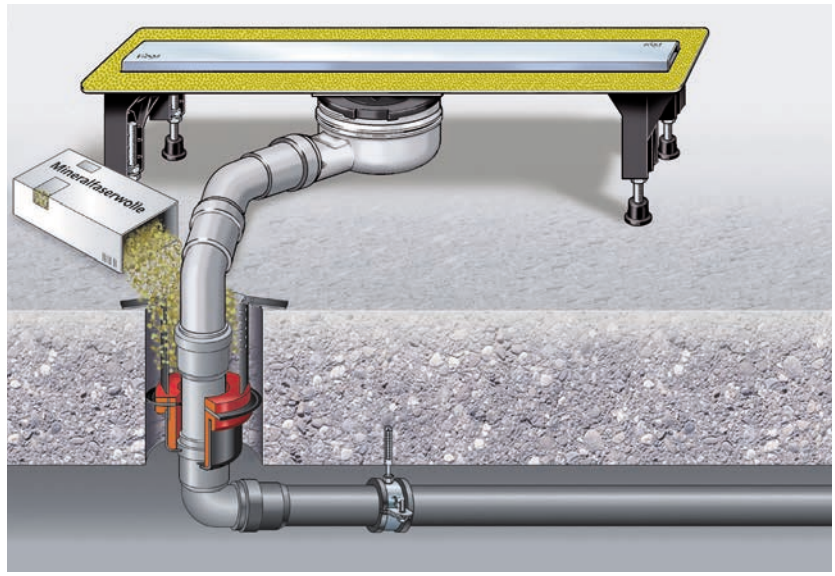

Fig. 3 – 146 Pipe lead-in for Advantix shower channel

Components Advantix pipe lead-in R 120

Integrated in the floor, with floor drain and cast iron pipe connection

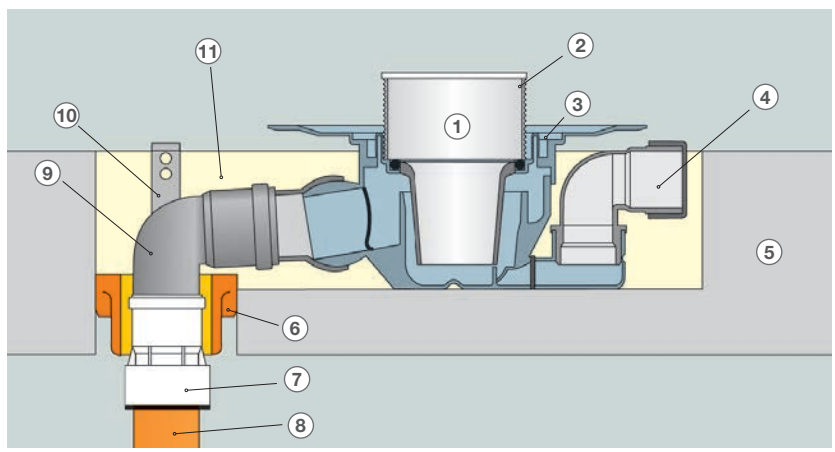

Fig. 3 – 147 Advantix pipe lead-in R 120 – components

1. Top
2. Grate
3. Floor drain
4. Inlet
5. Bare floor ≥ 150 mm
6. Advantix pipe lead-in R 120
7. Cast iron pipe to HT connector DN 50
8. Non-flammable pipe – e.g. cast iron pipe
9. HT elbow
10. Bracket
11. Mortar grouting

Backflow traps

Product group

X4

Basic selection criteria

In the event of a backflow in the wastewater system the water rises until it flows over at the first possible point. This height level – in most cases the upper edge of the road – is referred to as the backflow level.

Installation situation

Backflow trap, Grundfix Plus in the event of backflow

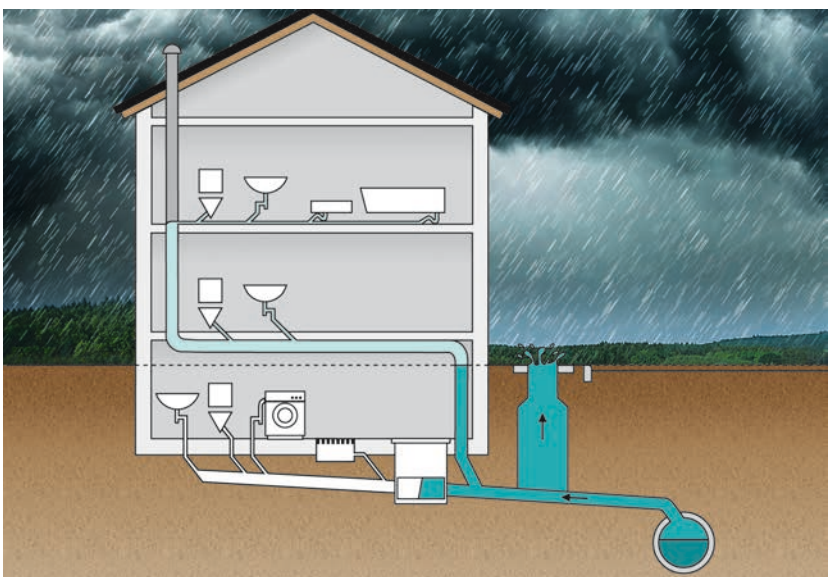

Fig. 3 – 148 Operating principle of the backflow protection

Reasons for backflow

- excessive rainfall
- unscheduled introduction
- overloading of the sewer pipelines
- cross section reductions
- defective pumps

According to EN 12 056-4 and DIN 1986-100, drainage points beneath the backflow level should be secured against backflow from the sewer by backflow traps in acc. with EN 13 564-1.
If there are unsecured drainage points below the backflow level, cellar flooding can lead to damage to property, contamination and the resulting risk of disease. The deciding factor as to what is above or below the backflow level is normal water level in the odour trap. Drainage points above the backflow level are not in danger of backflow. Drainage equipment should only be below the backflow level when it is absolutely necessary.

In complying with specific obligations to furnish evidence, small areas under approx. 5 m² outside of buildings may also be connected to the backflow protection.

Terrace drain

Backflow protection using Grundfix

Fig. 3 – 149 Grundfix

The requirements on the backflow protection are described in the standards EN 13564-1 and DIN 1986-3. Maintenance should be performed twice a year; inspections every month. All Viega backflow traps are quality-controlled in acc. with EN 13564.

Liability for damage

Municipalities cannot be held liable for damage caused by backflow. In most cases the house owners themselves have to bear the consequences of cellar flooding. They are also responsible towards their tenants because the insurance companies may limit compensation or even refuse payment in the event of insufficient protective measures.

Kinds of wastewater

Regarding backflow traps, the choice of product is determined by the type of water, which flows through the backflow protection in the direction of the sewer.

One differentiates between:

- Wastewater free from faecal matter – e.g. from showers or washing machines (grey water).
- Wastewater containing faecal matter – e.g. from urinals and toilets (wastewater containing faecal matter).

Which kind of wastewater is returned in case of a backflow – from the sewer in the direction of the backflow protection – is immaterial.

Selection criteria for backflow traps

Types of backflow traps and their usage conditions

Field of application of backflow traps	Permissible types according to EN 13564-1	Suitable Viega backflow traps
Wastewater free from faecal matter	2, 3, 5	Grundfix, Grundfix Plus Optifix 3 Sperrfix 3 Sperrfix »New«
Wastewater containing faecal matter	3 with the designation »F«	Grundfix Plus Control
Systems for utilisation of rainwater	0, 1, 2[1]	Grundfix

Table 3 – 16

[1] quote from DIN 1989-1: »Types 0, 1 and 2 of systems for utilisation of rainwater may be connected to overflows of underground tanks only if these are not connected to a mixed water sewer.«

Installation locations

Backflow traps must not be used to protect drainage items installed above backflow level (see Fig. 3 – 151) because flooding may result inside the building in the event of a backflow.

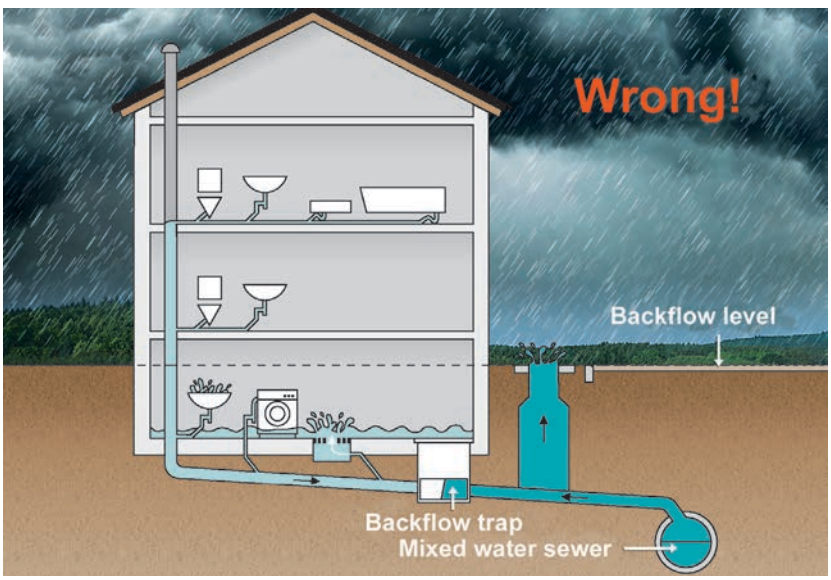

Fig. 3 – 150 Backflow trap – incorrect arrangement

Installation locations of backflow traps

Incorrect arrangement!

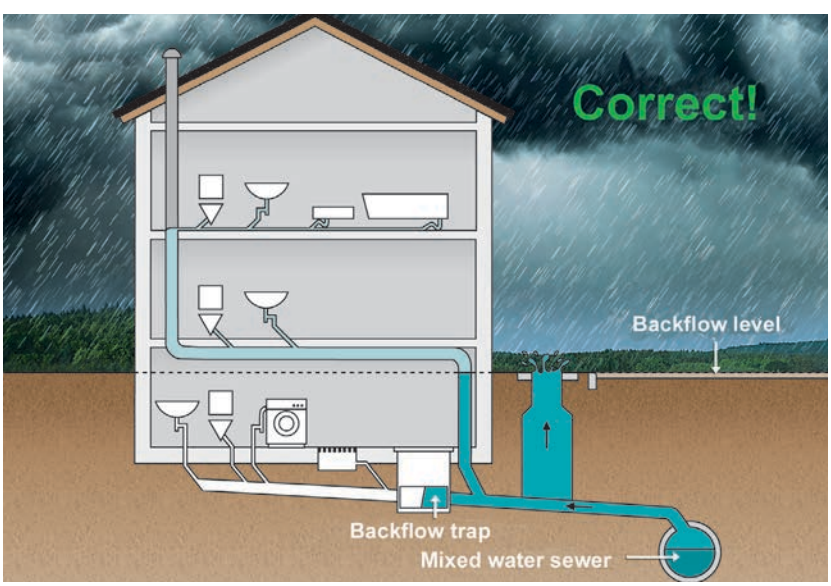

Fig. 3 – 151 Backflow trap – correct arrangement

Installation locations of backflow traps

Correct arrangement!

Only the objects located below the backflow level are protected

Selection aids – product overview

Backflow protection for wastewater free from faecal matter – grey water
For rooms of subordinated usage – no hazard to expensive property and the health of the users.
The drainage points cannot be used in the event of a backflow.
Direct protection of one or several drainage objects such as washing machines, sink basins, showers, bathtubs.

Equipment versions: vertical as a siphon or horizontal.

Viega Sperrfix
Type 5
For individual objects

Fig. 3 – 152 Viega Sperrfix – horizontal

Siphon vertical

- ½ x 40 mm Art. No. 607128
- ½ x 50 mm Art. No. 607135

Siphon horizontal

- 50 mm Art. No. 607166

Viega Optifix
Type 5
For floor drains

Fig. 3 – 153 Viega Optifix

Floor drain DN 100

Protection of drainage objects – art. no. 462963.

- Lateral connection DN 70.
- Drainage capacity via grate 1.5–1.8 l/s

Height adjustment pieces

- 30–185 mm Art. No. 469979
- 30–350 mm Art. No. 489083

Backflow protection for wastewater free from faecal matter

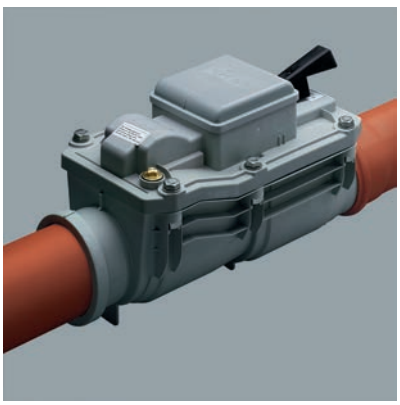

Fig. 3 – 154 Grundfix

Installation in main or collecting pipes for the protection of all drainage items below backflow level.

With mechanically self-closing backflow flaps

- DN 100 Art. No.: 305 376
- DN 125 Art. No.: 305 383
- DN 150 Art. No.: 310 332

Grundfix
Type 2
For main pipelines

Backflow protection for wastewater containing faecal matter

Installation in main or collecting pipes for the protection of rooms of subordinated usage located below backflow level..

Mounting conditions
- Expensive property and/or the health of users are not at hazard in the event of flooding.
- The drainage points cannot be used in the event of a backflow.
- One WC at least should be located above backflow level.

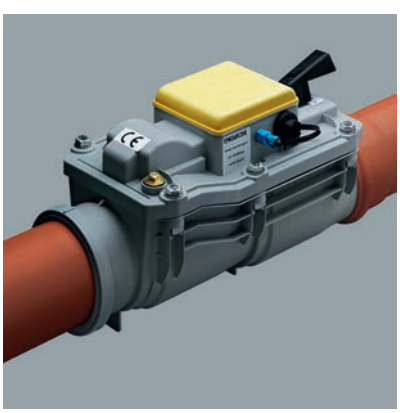

Fig. 3 – 155 Grundfix Plus Control

Electronic operating condition message/motorized actuation of the backflow flaps

- DN 100 Art. No.: 667 788
- DN 125 Art. No.: 667 795
- DN 150 Art. No.: 667 801

Grundfix Plus Control
Type 3
For main pipelines

Sperrfix – individual protection
Sperrfix protects an object or several objects at the same time from backflow – e.g. sink basins, washbasins or showers.
Thanks to its easy mounting it is well suitable for subsequent installation as a backflow protection, for example to prevent external-source backwashing from toilets in bathtubs.

Sperrfix
Type 5 according to EN 13564-1

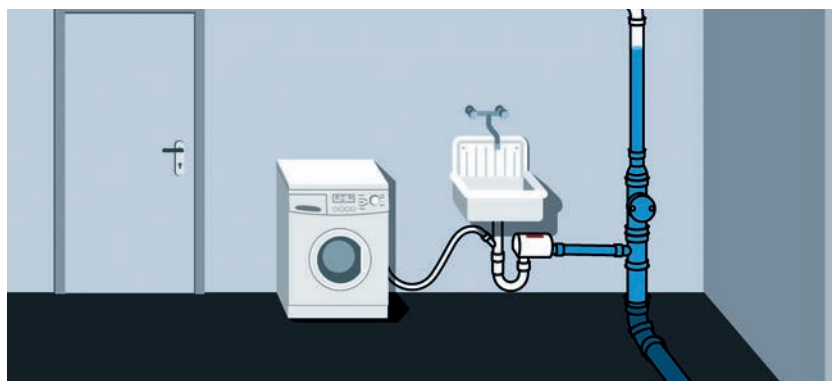

Fig. 3 – 156 Individual protection

Equipment versions

- Vertical pipe odour trap DN 40 and DN 50 – ½ x 40mm, art. no. 607128
- Horizontal for installation in individual or collecting pipes in DN 50 – ½ x 50 mm, art. no. 607166.

Sperrfix
Clipped on the odour trap

Sperrfix horizontal
Double backflow protection
Manual actuator of the 2nd shutter valve

Fig. 3 – 157 Sperrfix

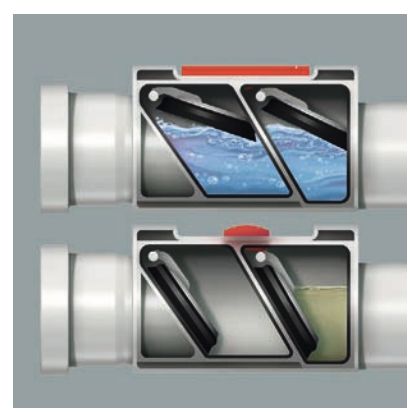

Fig. 3 – 158 Double backflow protection

Structure and function

Sperrfix has two automatically opening and closing backflow flaps and a manually operated emergency shut-off device. Lateral access to the backflow flaps allows easy and comfortable cleaning of the backflow flaps.

The funnel siphon and the different adjusting pipes (accessories) allow connecting leaking water connections or additional objects.

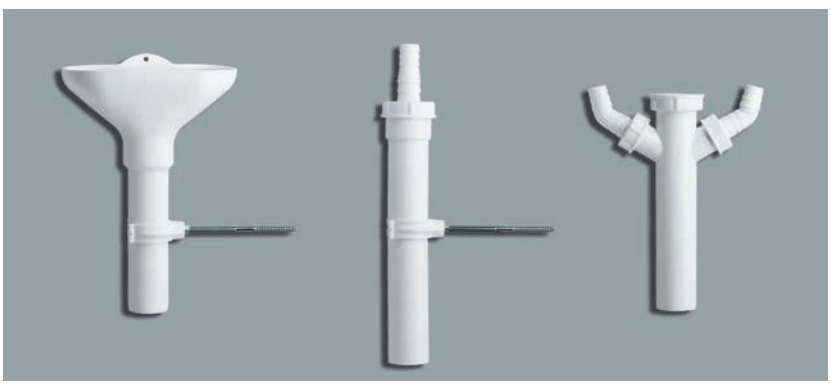

Fig. 3 – 159 Accessories

Accessories

Siphon variants for Sperrfix siphon

Features

- Sizes — drainage capacity [l/s]
  - D 1½ x DN 40 — 0.8
  - D 1½ x DN 50 — 1.0
  - Sperrfix horizontal DN 50 — 1.0

- Easy installation and retrofitting
- Manual emergency shut-off device
- Easy maintenance through well accessible components – can be completely disassembled
- Accessories for various siphon equipment

Combined backflow prevention systems

Optifix 3 – floor drain

Field of application: Floor drain for the protection of several objects.

Structure and function

Optifix 3 is equipped with two self-acting backflow traps and a manual actuator. Maintenance and cleaning is easily possible by removing the internal components. Further objects can be connected backflow-proof via inlet DN 70.

Optifix 3

Type 5 according to EN 13564-1 protects several objects via the inlet

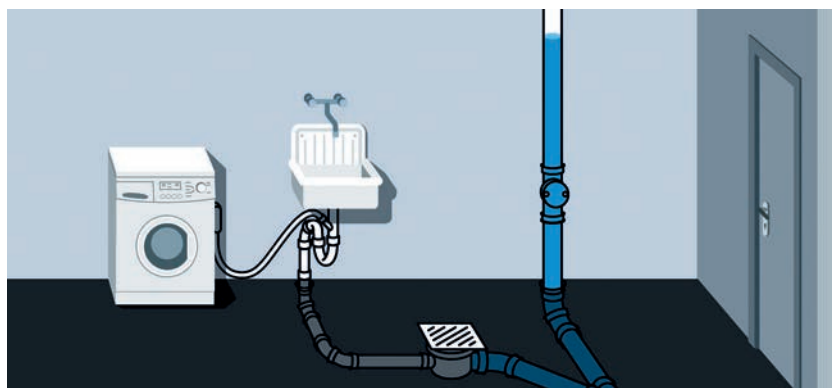

Fig. 3 – 160 Combined backflow prevention system

Maintenance

Without tools

Shutter valves

Automatic backflow trap

Fig. 3 – 161 Shutter valves

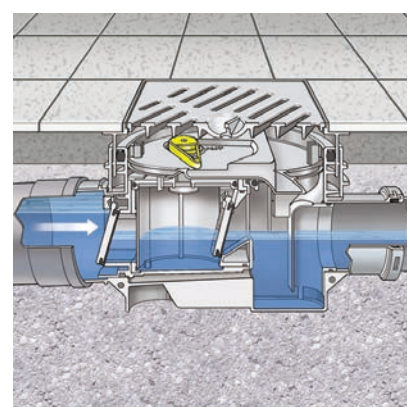

Fig. 3 – 162 Automatic backflow trap

Features

- Drainage capacity 1.6 l/s
- Easy cleaning and maintenance without tools – with easy access to the main pipeline
- Easy mounting due to rotatable and tiltable top

Grundfix – for wastewater free from faecal matter

Field of application: Wastewater free from faecal matter. Installation in main or collecting pipes for the protection of all drainage items below backflow level – e.g. washing machines, showers, washbasins and sink basins.

Structure and function

Grundfix is equipped with two self-acting backflow traps and a manual actuator. The backflow flaps are closing automatically by the resulting backflow pressure and that way protect the downstream drainage items.

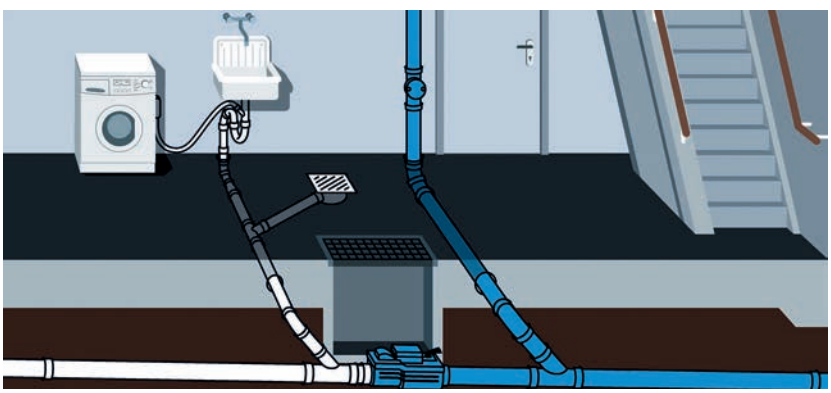

Fig. 3 – 163 Grundfix

Grundfix

Type 2 according to EN 13564

Protection of all connected objects

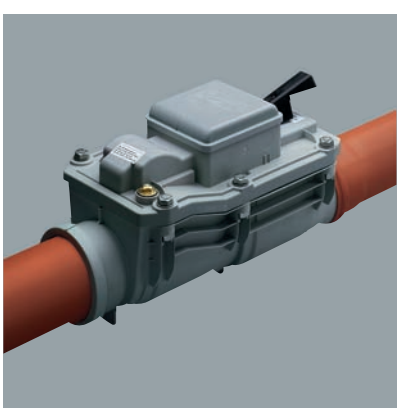

Fig. 3 – 164 Emergency shut-off device

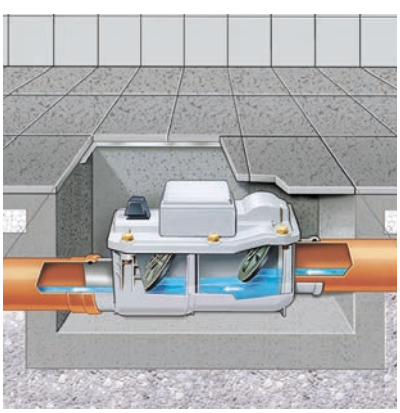

Fig. 3 – 165 Shutter valves

Grundfix

With manual emergency shut-off device

Shutter valves

Automatic backflow trap

Features

- Available sizes [DN]: 100/125/150
- Easy maintenance and functional testing – few components
- Robust flap technology
- Retrofitting possible with model 4987.38

Grundfix Plus Control – for wastewater containing faecal matter

Field of application: For wastewater containing faecal matter For usage in main or collecting pipes for the protection of all drainage items below backflow level – e.g. washing machines, showers, washbasins and sink basins.

Structure and function

Grundfix Plus Control is a fully automatic, electronically controlled backflow trap with pressure sensor, motorized backflow flap and manual actuator as an emergency shut-off device.

Grundfix Plus Control

Type 3 according to EN 13564

Safe from flooding
With signal and control unit in the used cellar room

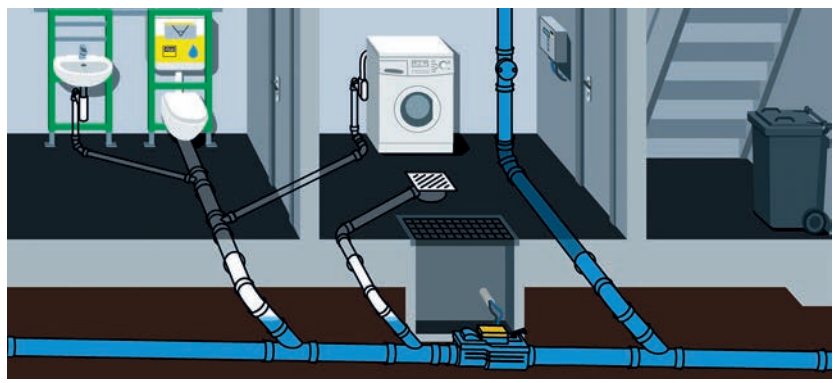

Fig. 3 – 166 Grundfix Plus Control

Electronic control unit

Operator-friendly control unit operated by 3 buttons. Indication of operating condition by LCD display with text output. Visual and audible signals for the backflow risk, actual backflow, due maintenance and insufficient battery charging status.

Grundfix Plus Control

With manual interlock

Motor-powered flaps are open for normal operation

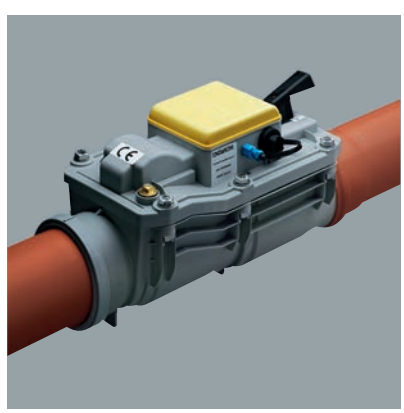

Fig. 3 – 167 Manual interlock

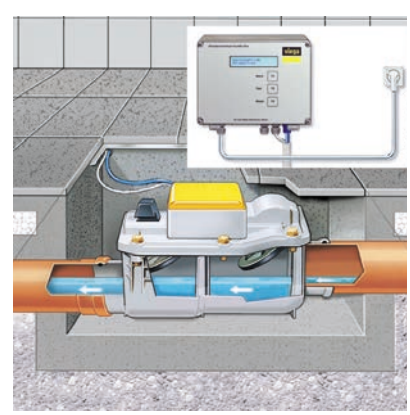

Fig. 3 – 168 Motor-powered flaps

Fig. 3 – 169 Control panel – control

Features

- Sizes [DN]: 100/125/150
- Control unit with visual and audible signal indication
- Daily automatic functional test of the control
- Voltage input from 88 to 264 Volt
- Battery emergency supply in the event of a power failure
- Battery management for a long service life and automatic shut-off when the battery voltage is too low

Electronic control unit

With audible and visual indication of the operating conditions

3

Care and maintenance

Maintenance according to DIN 1986-3 should be performed every six months of protection devices in drainage systems.

Fig. 3 – 170 Maintenance

Work should be performed by instructed specialist personnel in observing the following rules:

- Remove the sealing cap.
- Clean the components.
- Replace defective components; do not repair.
- Simulate backflow and check leak tightness.
- Check function of backflow flaps at backsiphonage of water.

Optifix

Maintenance-friendly handling

Maintenance agreement

When mounting the backflow protection, the company performing the task should familiarize the user with operation and instruct him about his duties. The operation, maintenance and testing instructions supplied by the manufacturer should be explained and handed over to the user. They should be stored well visibly in the close vicinity of the backflow trap. It can always be recommended concluding a maintenance agreement with a specialist company to ensure sustained reliable operation.

Spare parts management

The spare parts management of Viega provides trade professionals with an application for quickly finding spare parts.
Supported by exploded drawings all available spare parts can be displayed with a reference to the product groups in the catalogue.

Special filters make global searching easier – e.g. grates, sealing elements, etc. – and direct immediately to the target.

Features

- Intuitive search filters
- All Viega products and spare parts are retrievable
- Display of the product images with model numbers

Spare parts search in product groups

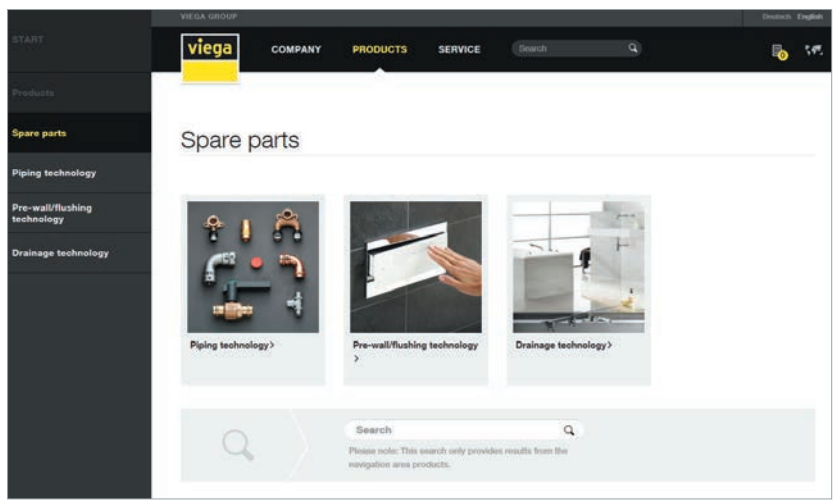

Fig. 3 – 171

Spare parts search via exploded drawings

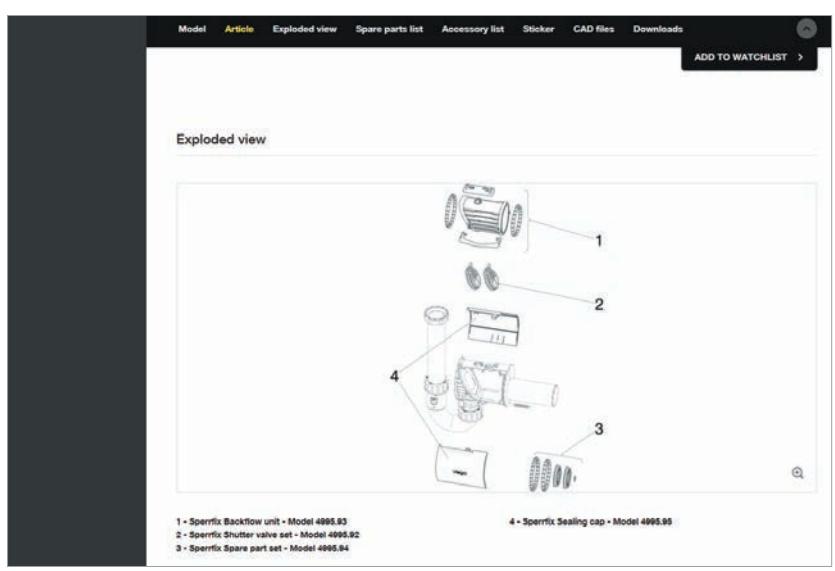

Fig. 3 – 172

Appendix

Wastewater pipes – product overview

According to DIN EN 12056

Types of pipes – overview of nominal widths

		HT [mm]	PVC [mm]	Geberit PE DIN 19535/37 [mm]	Wavin PE DIN 19535 [mm]	Wavin AS [mm]	Geberit dB 20 DIN 19535 [mm]	Friatec Friaphon DIN 19561 [mm]	Cast iron pipe DIN EN 877 [mm]
DN 30 $Ø_{inside}$ = **26.0**	$Ø_{outside}$ $Ø_{inside}$ S_{wall}				32.0 26.0 3.0				
DN 40 $Ø_{inside}$ = **34.0**	$Ø_{outside}$ $Ø_{inside}$ S_{wall}	40.0 36.4 1.8		40.0[1] 34.0 3.0	40.0 34.0 3.0				48.0 42.0 3.0
DN 50 $Ø_{inside}$ = **44.0**	$Ø_{outside}$ $Ø_{inside}$ S_{wall}	50.0 46.4 1.8		50.0[2] 44.0 3.0	50.0 44.0 3.0			52.0 46.4 2.8	
DN 56 $Ø_{inside}$ = **49.0**	$Ø_{outside}$ $Ø_{inside}$ S_{wall}			56.0[3] 50.0 3.0	56.0 50.0 3.0	58.0 50.0 4.0	56.0 [5] 50.0 3.0		58.0 51.0 3.5
DN 60 $Ø_{inside}$ = **56.0**	$Ø_{outside}$ $Ø_{inside}$ S_{wall}				63.0 57.0 3.0				
DN 70 $Ø_{inside}$ = **68.0**	$Ø_{outside}$ $Ø_{inside}$ S_{wall}	75.0 71.2 1.9		75.0 69.0 3.0	75.0 69.0 3.0	78.0 69.0 4.5	75.0 68.0 3.6	78.0 68.2 4.9	78.0 71.0 3.5
DN 80 $Ø_{inside}$ = **75.0**	$Ø_{outside}$ $Ø_{inside}$ S_{wall}								83 76 3.5
DN 90 $Ø_{inside}$ = **79.0**	$Ø_{outside}$ $Ø_{inside}$ S_{wall}			90.0[4] 83.0 3.5	90.0 83.0 3.0	90.0 81.0 4.5	90.0 [6] 79.0 5.5		
DN 100 $Ø_{inside}$ = **96.0**	$Ø_{outside}$ $Ø_{inside}$ S_{wall}	110.0 104.6 2.7	110.0 104.0 3.0	110.0 101.4 4.3	110.0 101.4 4.3	110.0 99.4 5.3	110.0 98.0 6.0	110.0 99.4 5.3	110.0 103.0 3.5
DN 125 $Ø_{inside}$ = **113.0**	$Ø_{outside}$ $Ø_{inside}$ S_{wall}	125.0 118.8 3.1	125.0 119 3.0	125.0 115.2 4.9	125.0 115.2 4.9	135.0 124.4 5.3		135.0 123.8 5.6	135.0 127.0 4.0
DN 150 $Ø_{inside}$ = **152.2**	$Ø_{outside}$ $Ø_{inside}$ S_{wall}	160.0 152.2 3.9	160.0 152.8 3.6	160.0 147.6 6.2	160.0 147.6 6.2	160.0 149.4 5.3		160.0 147.4 6.3	160.0 152.0 4.0
DN 200 $Ø_{inside}$ = **184.0**	$Ø_{outside}$ $Ø_{inside}$ S_{wall}		200.0 191.0 4.5	200.0 187.6 6.2	200.0 187.6 6.2				210.0 200.0 5.0

Table 3 – 17

Former sizes according to DIN 1986:

[1] DN 30 [2] DN 40 [3] DN 50 [4] DN 80 [5] DN 50 [6] DN 80